SLURRY CONTROL VALVE

The Series 39 Slurry Control Valve is robustly designed to withstand the most demanding services including slurry, erosive, corrosive and scaling applications. Built with advanced wear-resistant materials for reliability and easy service.



INDUSTRIES

- Mining & Mineral Processing
- Alumina
- Pulp & Paper
- Wastewater Treatment
- Power Generation
- Chemical Processing
- Cement & Aggregate
- Sugar

APPLICATIONS

- Slurry Transport
- Grinding & Milling
- Digestion
- Filter Press
- Precipitation
- Flotation
- Thickener
- Filter Pump
- Tailings
- Paste
- Bulk Material Handling
- Ash Removal
- Lime Dosing
- Flash Tank Level Control

MEDIA

- Heavy/Medium/Light Slurries
- Abrasive Slurries
- High Concentration Slurries
- Slurries with Large Particle Size
- Scaling & Cementing Slurries
- Process Water
- Process Liquors
- Fly Ash
- Lime Slurry
- Bauxite Slurry
- Hydrate Slurry

SPECIFICATIONS

Size Range	NPS 2 to 24
	DN 50 to 600
Body Styles	Wafer | Double Flanged
Temperature Range	-20° F to 446° F (-29° C to 230° C)
Pressure Rating[1]	ASME Class 150
Max Pressure Differential:	232 psi (16 bar)
Leakage Rate	FCI 70-2 Class I

1 Other pressure classes available upon request.

MATERIAL OPTIONS

Body	Carbon Steel
Liner	Chrome Iron
	Steel + AbrasiTuff
	Tungsten Carbide
Disc	Chrome Iron
	Steel + AbrasiTuff
Stem	17-4 PH + SlurryGuard™

DESIGN STANDARDS

Valve Design	ASME B16.34
Top Flange	ISO 5211
Flange Drilling	ASME B16.5 Class 150
Testing standard	API 598 Shell Test
Face-to-Face	Manufacturer's Standard

© 2026 BRAY INTERNATIONAL. ALL RIGHTS RESERVED. BRAY.COM

FEATURES

1 ASYMMETRIC DISC
Efficiently deflects high-velocity particles, minimizes wear and protects the stem from erosion.

2 DYNAMIC CAM-LIKE OPENING
Reduces flow velocity and wear at disc leading edge.

3 REPLACEABLE WEAR TRIM
Replaceable chrome iron and AbrasiTuff trims maximize durability.

4 BLOWOUT-PROOF INTERNAL DRIVE STEM
Enables easy servicing of both stem and disc, while eliminating torque-transmitting components exposed to abrasive fluids.

5 STEM BEARINGS
Nitride-hardened 316 stainless steel stem bearings resist strain, vibration, and high temperatures.

6 LIVE-LOADED DUAL PACKING
Seals the stem and prevents slurry ingress, improving protection, durability, and sealability vs. traditional single packing.

7 SLURRYGUARD™ COATED STEM
Creates a hard, low-friction surface that resists slurry buildup. Reduces operating torque, improves abrasion resistance, and smoothes operation vs. uncoated stems in scaling environments.

8 GREASE INJECTION PORTS
Standard grease injection ports offer the ability to enhance scaling protection when equipped with optional factory-installed Zerk fittings.

9 MODULAR CONSTRUCTION
Modular pieces allow for ease of replacement in the field.

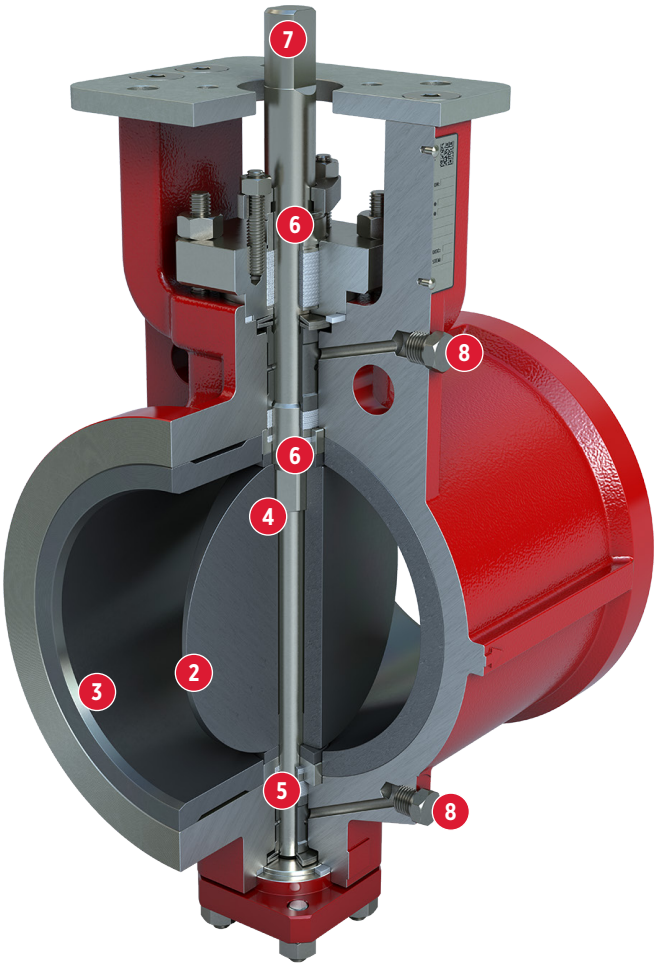

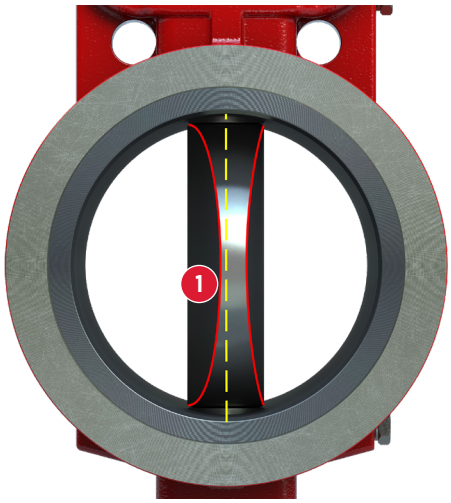

© 2026 BRAY INTERNATIONAL. ALL RIGHTS RESERVED. BRAY.COM