SERIES 39

SLURRY CONTROL VALVE

TECHNICAL SALES MANUAL

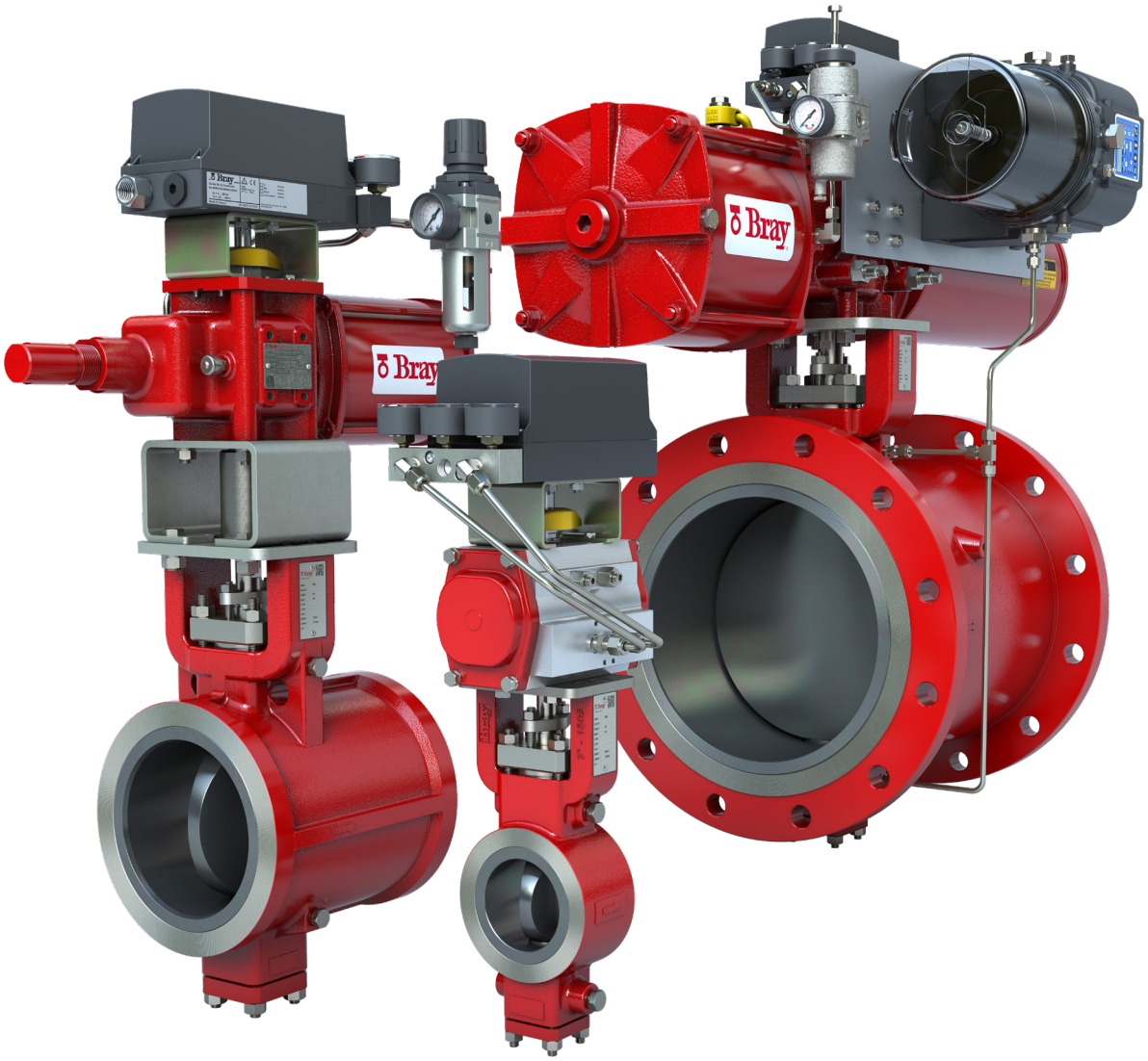

Bray®

BRAY.COM

THE HIGH PERFORMANCE COMPANY

CONTENTS

OVERVIEW 3
FEATURES & BENEFITS 4
VALVE SELECTION 5
PARTS LIST AND MATERIALS SPECIFICATIONS 6
PARTS CALLOUT 7
DIMENSIONS & WEIGHTS 9
MAXIMUM ALLOWABLE STEM TORQUE 12
VALVE SIZING COEFFICIENTS 13
FLANGE TO VALVE BOLTING DATA 14

© 2026 BRAY INTERNATIONAL. ALL RIGHTS RESERVED. BRAY.COM

SLURRY CONTROL VALVE

The Series 39 Slurry Control Valve is robustly designed to withstand the most demanding services including slurry, erosive, corrosive and scaling applications. Built with advanced wear-resistant materials for reliability and easy service.



INDUSTRIES

- Mining & Mineral Processing
- Alumina
- Pulp & Paper
- Wastewater Treatment
- Power Generation
- Chemical Processing
- Cement & Aggregate
- Sugar

APPLICATIONS

- Slurry Transport
- Grinding & Milling
- Digestion
- Filter Press
- Precipitation
- Flotation
- Thickener
- Filter Pump
- Tailings
- Paste
- Bulk Material Handling
- Ash Removal
- Lime Dosing
- Flash Tank Level Control

MEDIA

- Heavy/Medium/Light Slurries
- Abrasive Slurries
- High Concentration Slurries
- Slurries with Large Particle Size
- Scaling & Cementing Slurries
- Process Water
- Process Liquors
- Fly Ash
- Lime Slurry
- Bauxite Slurry
- Hydrate Slurry

SPECIFICATIONS

Size Range	NPS 2 to 24
	DN 50 to 600
Body Styles	Wafer | Double Flanged
Temperature Range	-20° F to 446° F (-29° C to 230° C)
Pressure Rating[1]	ASME Class 150
Max Pressure Differential:	232 psi (16 bar)
Leakage Rate	FCI 70-2 Class I

1 Other pressure classes available upon request.

MATERIAL OPTIONS

Body	Carbon Steel
Liner	Chrome Iron
	Steel + AbrasiTuff
	Tungsten Carbide
Disc	Chrome Iron
	Steel + AbrasiTuff
Stem	17-4 PH + SlurryGuard™

DESIGN STANDARDS

Valve Design	ASME B16.34
Top Flange	ISO 5211
Flange Drilling	ASME B16.5 Class 150
Testing standard	API 598 Shell Test
Face-to-Face	Manufacturer's Standard

© 2026 BRAY INTERNATIONAL. ALL RIGHTS RESERVED. BRAY.COM

FEATURES

1 ASYMMETRIC DISC
Efficiently deflects high-velocity particles, minimizes wear and protects the stem from erosion.

2 DYNAMIC CAM-LIKE OPENING
Reduces flow velocity and wear at disc leading edge.

3 REPLACEABLE WEAR TRIM
Replaceable chrome iron and AbrasiTuff trims maximize durability.

4 BLOWOUT-PROOF INTERNAL DRIVE STEM
Enables easy servicing of both stem and disc, while eliminating torque-transmitting components exposed to abrasive fluids.

5 STEM BEARINGS
Nitride-hardened 316 stainless steel stem bearings resist strain, vibration, and high temperatures.

6 LIVE-LOADED DUAL PACKING
Seals the stem and prevents slurry ingress, improving protection, durability, and sealability vs. traditional single packing.

7 SLURRYGUARD™ COATED STEM
Creates a hard, low-friction surface that resists slurry buildup. Reduces operating torque, improves abrasion resistance, and smoothes operation vs. uncoated stems in scaling environments.

8 GREASE INJECTION PORTS
Standard grease injection ports offer the ability to enhance scaling protection when equipped with optional factory-installed Zerk fittings.

9 MODULAR CONSTRUCTION
Modular pieces allow for ease of replacement in the field.

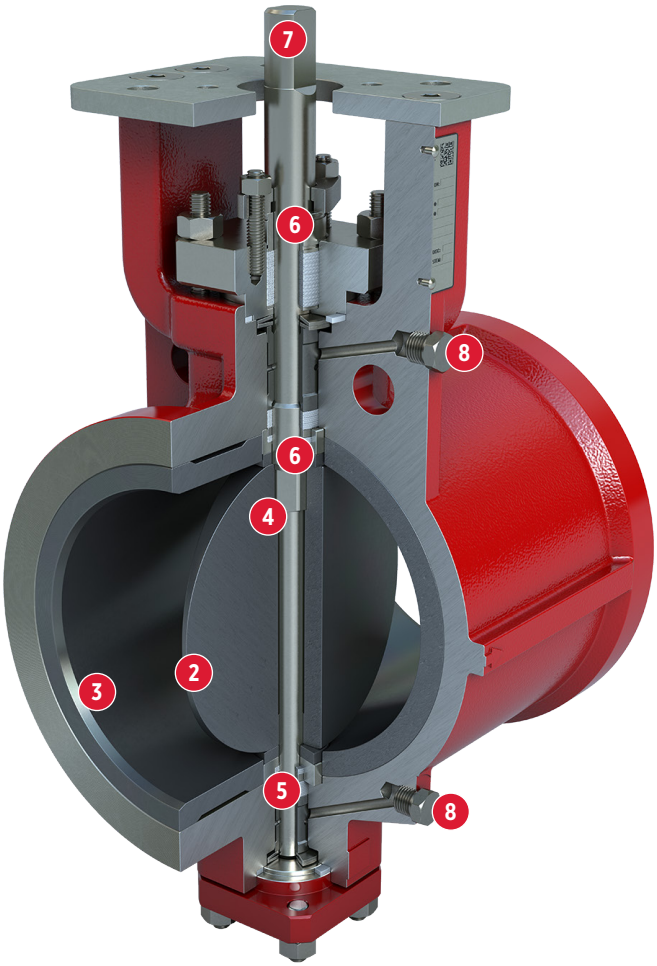

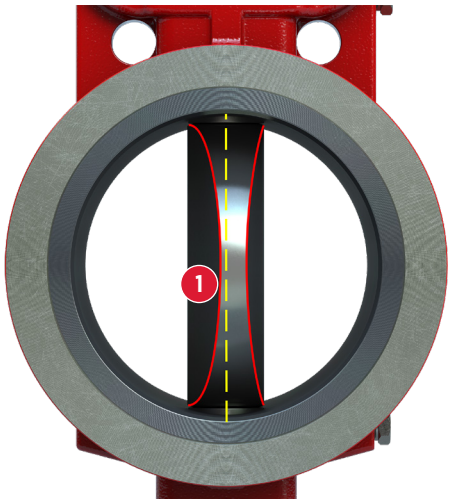

© 2026 BRAY INTERNATIONAL. ALL RIGHTS RESERVED. BRAY.COM

VALVE PART NUMBERING SYSTEM

Select one code from each category to build a complete valve order number.

39-XXXX-110XX-XXX

SERIES
39

Code
39

SIZE
XXXX

Code	NPS	DN
0200	2	50
0300	3	80
0400	4	100
0600	6	150
0800	8	200
1000	10	250
1200	12	300
1400	14	350
1600	16	400
1800	18	450
2000	20	500
2400	24	600

BASE NUMBER
110XX

Code	Description	Flange Drilling
11031	Long Body Wafer (2" to 6")	ASME Class 150
11033	Short Body Wafer (2" to 24")	ASME Class 150
11034	Long Body Flanged (8" to 24")	ASME Class 150

TRIM
XXX

Code	Item	Material
4MM (2" - 24")	Body	Carbon Steel
	Liner	Chrome Iron
	Disc	Chrome Iron
	Hub spacer	Tungsten Carbide
	Stem	17-4 PH + SlurryGuard™
C01 (8" to 24")	Body	Carbon Steel
	Liner	Steel + AbrasiTuff Overlay
	Disc	Steel + AbrasiTuff Overlay
	Hub spacer	Tungsten Carbide
	Stem	17-4 PH + SlurryGuard™
C02 (2" to 6")	Body	Carbon Steel
	Liner	Tungsten Carbide
	Disc	Steel + AbrasiTuff Overlay
	Hub spacer	Tungsten Carbide
	Stem	17-4 PH + SlurryGuard™

NOTES
> Not all combinations are possible.

EXAMPLE

39-0200-11031-4MM

> Wafer long body
> 2" / DN 50
> Trim: Carbon steel body, chrome iron liner and disc, tungsten carbide hub spacer, and 17-4 PH + SlurryGuard™ stem

BODY STYLES



Long Body Wafer
NPS 2 to 6 (DN 50 to 150)



Short Body Wafer
NPS 2 to 24 (DN 50 to 600)



Long Body Flanged
NPS 8 to 24 (DN 200 to 600)

© 2026 BRAY INTERNATIONAL. ALL RIGHTS RESERVED. BRAY.COM

PARTS LIST AND MATERIAL SPECIFICATIONS

ITEM	DESCRIPTION	MATERIALS
1	Body	Carbon Steel
2	Liner	Chrome Iron Steel + AbrasiTuff Tungsten Carbide
3	Disc	Chrome Iron Steel + AbrasiTuff
4	Upper Hub Spacer	Tungsten Carbide
4a	Lower Hub Spacer	Tungsten Carbide
5	Stem	17-4 PH + Slurryguard™
6	Upper Stem Seal Housing	440C
6a	Lower Stem Seal Housing	440C
7	Upper Stem Seal	PTFE
7a	Lower Stem Seal	PTFE
8	Upper Stem Seal Spacer	316 CFA
8a	Lower Stem Seal Spacer	316 CFA
9	Upper Bearing	316SS + Nitrided
9a	Lower Bearing	316SS + Nitrided
10	Upper Stem Seal Spring	50CrV4
10a	Lower Stem Seal Spring	50CrV4
11	Bonnet Gasket	PTFE
11a	End Cover Gasket	PTFE
12	Bonnet	Carbon Steel
12a	End Cover	Carbon Steel
13	Washer	316SS
14	Gland Packing	PTFE
15	Gland Ring	316SS
16	Gland Retainer	316SS
17	Top Plate	Carbon Steel
18	Top Plate Screw	316SS
19	Bonnet Stud (2” to 12”)	316SS
19	Bonnet Cap Screw (14” to 24”)	316SS
19a	End Cover Stud (2” to 12”)	316SS
19a	End Cover Cap Screw (14” to 24”)	316SS
20	Bonnet Nut (2” to 12”)	316SS
20a	End Cover Nut (2” to 12”)	316SS
21	Gland Stud	316SS
22	Gland Nut	316SS
23	Identification Tag	18-8SS
24	Drive Screw	18-8SS
25	Pressure Plug	316SS
26	Square Key (14” to 24”)	18-8SS
27	Gland Packing Springs	50CrV4

NOTES

> Material specifications provided for reference only, and are subject to change without notice.

© 2026 BRAY INTERNATIONAL. ALL RIGHTS RESERVED. BRAY.COM

PARTS CALLOUT - NPS 2-12 | DN 50 - 300

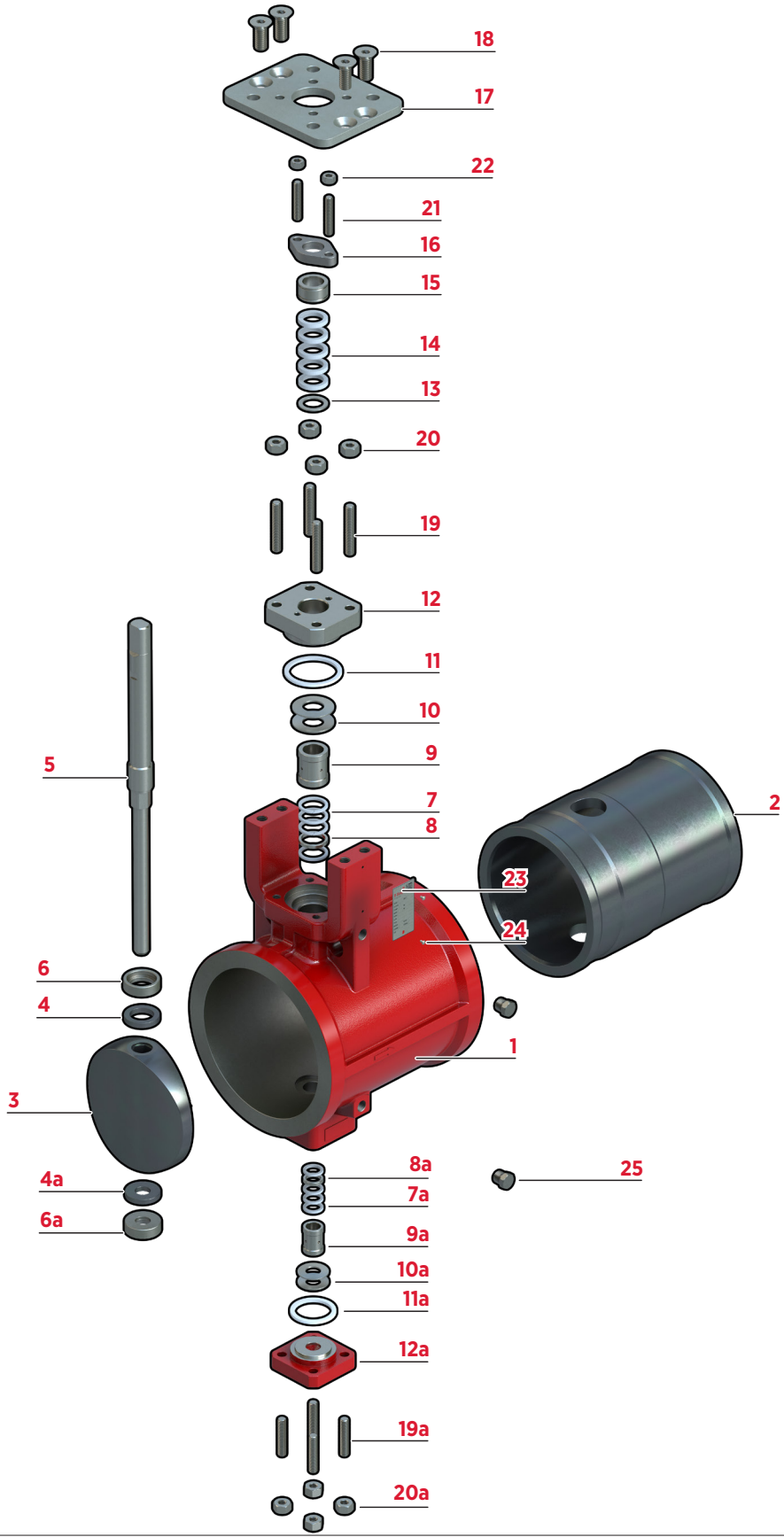

© 2026 BRAY INTERNATIONAL. ALL RIGHTS RESERVED. BRAY.COM

PARTS CALLOUT - NPS 14-24 | DN 350-600

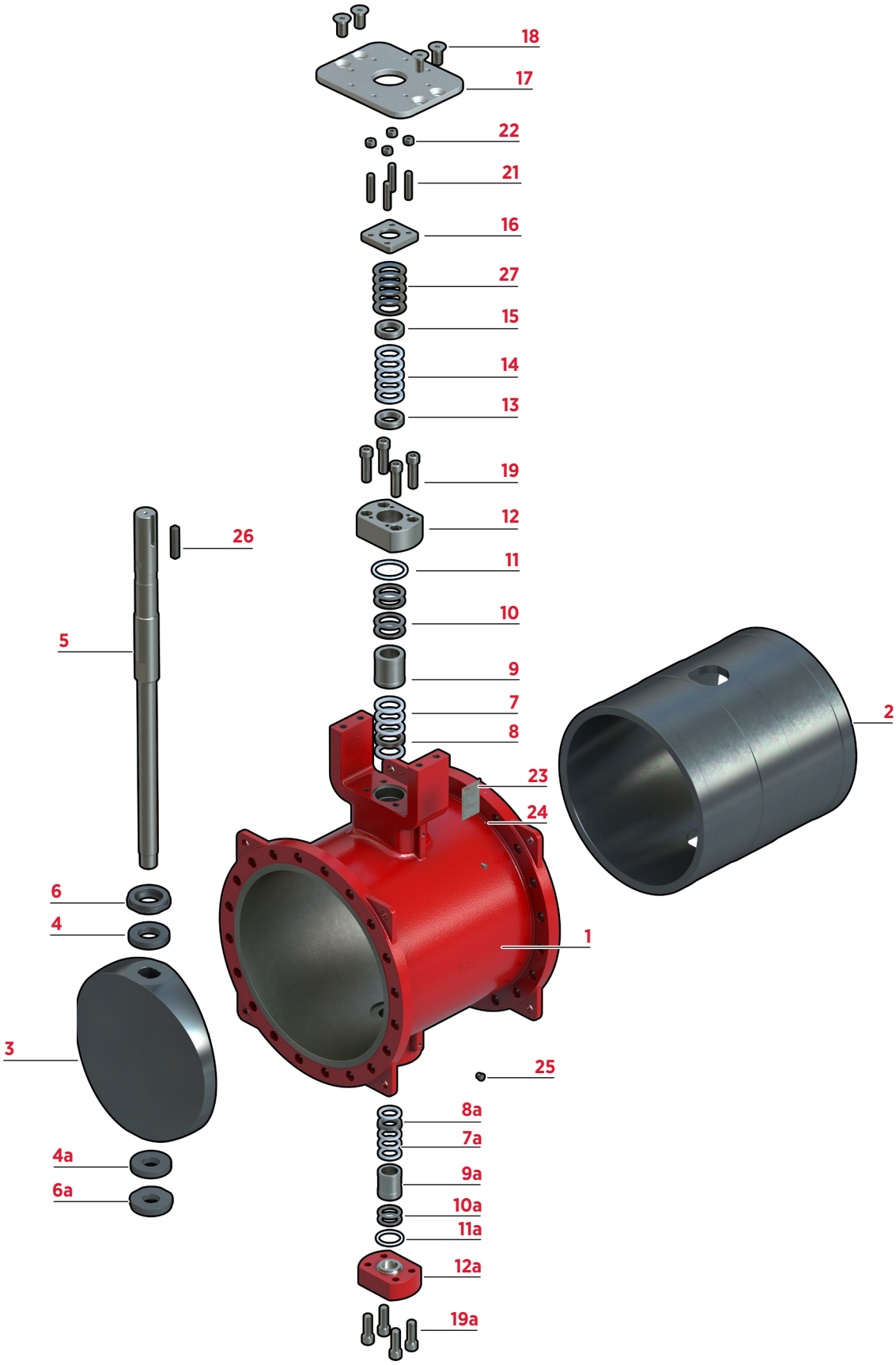

© 2026 BRAY INTERNATIONAL. ALL RIGHTS RESERVED. BRAY.COM

LONG BODY WAFER

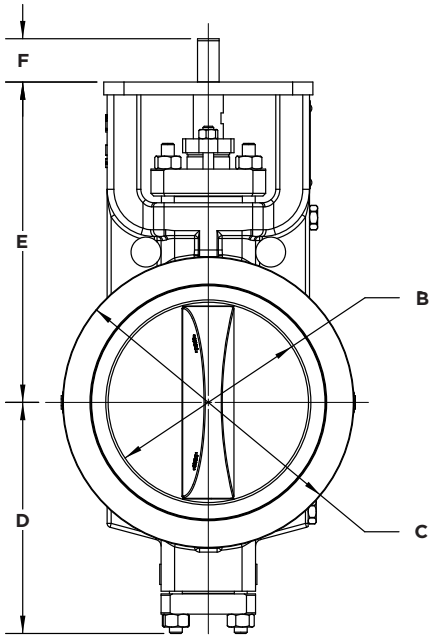

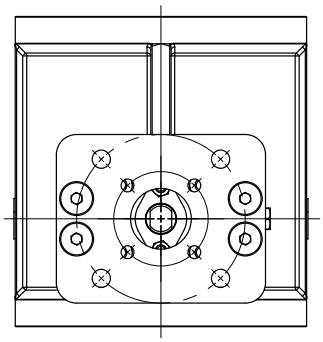

STEM DETAILS

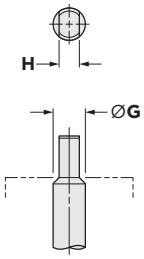

Stem With Flats
≤ NPS 12

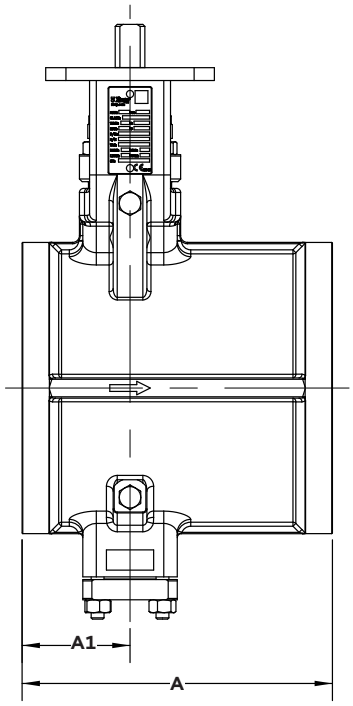

DIMENSIONS (in)												WEIGHT
NPS[1]	DN[1]	A	A1	ØB	ØC	D	E	F	ØG	H	Act. Mtg. Flange	(lbs)
2	50	3.15	1.18	2.01	3.74	4.41	6.65	1.26	0.63	0.43	F07	20
3	80	4.72	1.77	2.95	5.00	4.92	7.17	1.26	0.63	0.43	F07	29
4	100	5.91	2.36	3.94	6.34	5.75	8.35	1.26	0.87	0.63	F07/F12	51
6	150	9.06	3.15	5.91	8.62	6.77	9.37	1.26	0.87	0.63	F07/F12	90

DIMENSIONS (mm)												WEIGHT
NPS[1]	DN[1]	A	A1	ØB	ØC	D	E	F	ØG	H	Act. Mtg. Flange	(kg)
2	50	80	30	51	95	112	169	32	16	11	F07	9
3	80	120	45	75	127	125	182	32	16	11	F07	13
4	100	150	60	100	161	146	212	32	22	16	F07/F12	23
6	150	230	80	150	219	172	238	32	22	16	F07/F12	41

NOTES
1 For sizes not shown, contact Bray for more information.

© 2026 BRAY INTERNATIONAL. ALL RIGHTS RESERVED. BRAY.COM

LONG BODY FLANGED

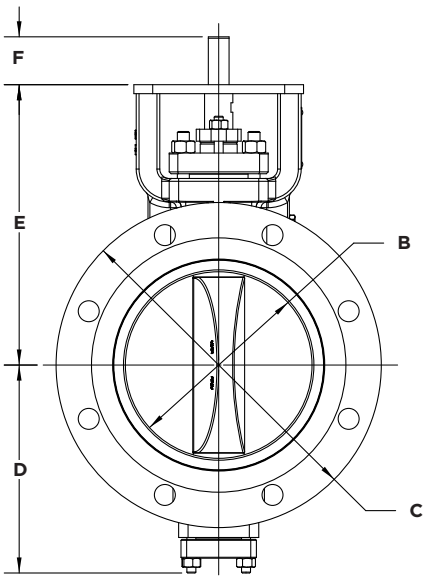

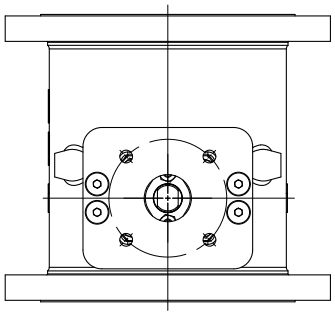

STEM DETAILS

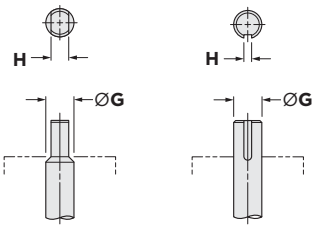

Stem With Flats
≤ NPS 12

Stem With Keyway
≥ NPS 14

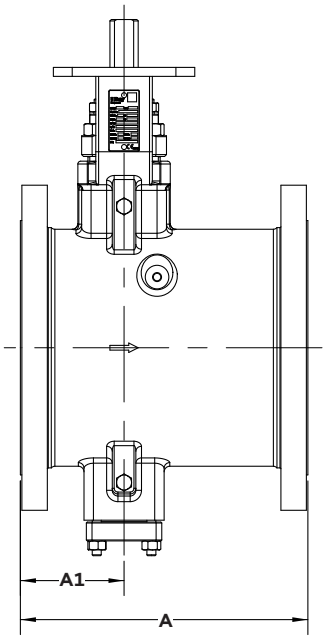

DIMENSIONS (in)												WEIGHT
NPS[1]	DN[1]	A	A1	ØB	ØC	D	E	F	ØG	H	Act. Mtg. Flange	(lbs)
8	200	12.01	4.33	7.80	13.58	8.70	11.73	2.00	1.18	0.87	F12	192
10	250	15.16	5.71	9.84	15.94	9.76	12.80	2.00	1.18	0.87	F12	284
12	300	17.91	6.50	11.81	19.09	10.75	13.90	2.00	1.18	0.87	F12/F16	437
14	350	18.70	9.35	13.19	21.14	13.50	18.07	2.50	1.97	0.47x0.39	F16	622
16	400	19.69	9.84	15.20	23.50	14.53	19.09	2.50	1.97	0.47x0.39	F16	778
18	450	21.65	10.83	17.13	25.08	16.06	20.63	2.50	1.97	0.47x0.39	F16	961
20	500	23.62	11.81	19.09	27.56	17.05	20.63	2.50	1.97	0.47x0.39	F16	1177
24	600	27.56	13.78	23.03	32.17	20.51	27.32	4.00	2.50	0.63 SQ	F25	2075

DIMENSIONS (mm)												WEIGHT
NPS[1]	DN[1]	A	A1	ØB	ØC	D	E	F	ØG	H	Act. Mtg. Flange	(kg)
8	200	305	110	198	345	221	298	51	30	22	F12	87
10	250	385	145	250	405	248	325	51	30	22	F12	129
12	300	455	165	300	485	273	353	51	30	22	F12/F16	198
14	350	475	238	335	537	343	459	64	50	12x10	F16	282
16	400	500	250	386	597	369	485	64	50	12x10	F16	353
18	450	550	275	435	637	408	524	64	50	12x10	F16	436
20	500	600	300	485	700	433	524	64	50	12x10	F16	534
24	600	700	350	585	817	521	694	102	63.5	15.9 SQ	F25	941

NOTES
1 For sizes not shown, contact Bray for more information.

© 2026 BRAY INTERNATIONAL. ALL RIGHTS RESERVED. BRAY.COM

SHORT BODY WAFER

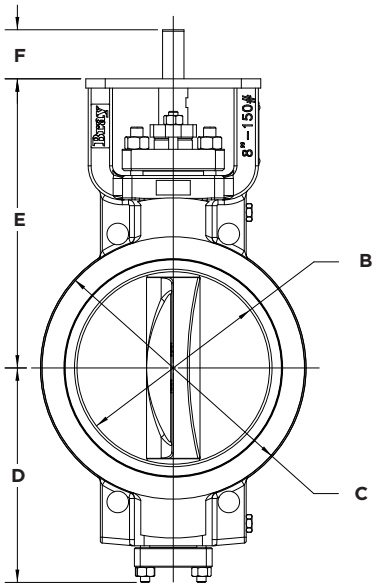

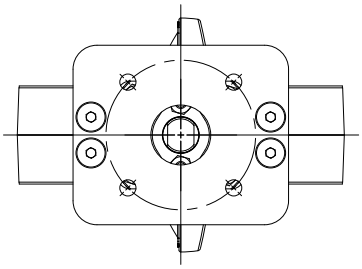

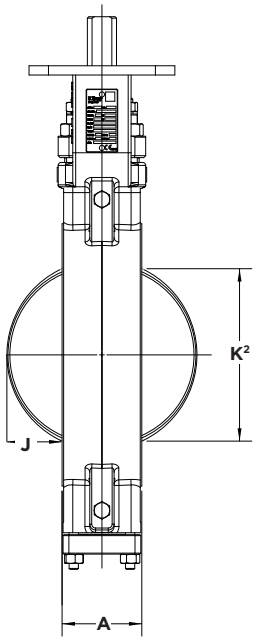

STEM DETAILS

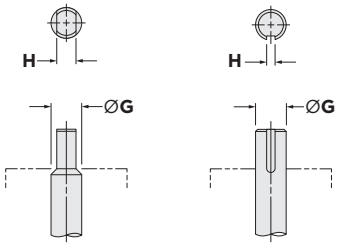

DIMENSIONS (in)													WEIGHT
NPS[1]	DN[1]	A	ØB	ØC	D	E	F	ØG	H	J	K²	Act. Mtg. Flange	(in)
2	50	2.52	2.01	3.74	4.41	6.65	1.26	0.63	0.43	-	-	F07	18
3	80	2.76	2.95	5.00	4.92	7.17	1.26	0.63	0.43	0.00	0.75	F07	22
4	100	2.99	3.94	6.34	5.75	8.35	1.26	0.87	0.63	0.02	2.36	F07/F12	40
6	150	2.99	5.91	8.62	6.77	9.37	1.26	0.87	0.63	0.05	4.92	F07/F12	55
8	200	3.23	7.80	10.75	8.70	11.73	2.00	1.18	0.87	0.09	7.01	F12	93
10	250	4.02	9.84	12.91	9.76	12.80	2.00	1.18	0.87	0.11	8.86	F12	132
12	300	4.02	11.81	15.16	10.75	13.90	2.00	1.18	0.87	0.16	10.94	F12/F16	168
14	350	4.37	13.19	16.46	13.50	18.07	2.50	1.97	0.47x0.39	0.17	12.24	F16	284
16	400	4.37	15.20	18.50	14.53	19.09	2.50	1.97	0.47x0.39	0.21	14.37	F16	326
18	450	5.00	17.13	21.02	16.06	20.63	2.50	1.97	0.47x0.39	0.24	16.18	F16	463
20	500	5.24	19.09	23.03	17.05	20.63	2.50	1.97	0.47x0.39	0.27	18.15	F16	522
24	600	6.22	23.03	27.28	20.51	27.32	4.00	2.50	0.63 SQ	0.33	21.97	F25	999

DIMENSIONS (mm)													WEIGHT
NPS[1]	DN[1]	A	ØB	ØC	D	E	F	ØG	H	J	K²	Act. Mtg. Flange	(kg)
2	50	64	51	95	112	169	32	16	11	-	-	F07	8
3	80	70	75	127	125	182	32	16	11	0.05	19	F07	10
4	100	76	100	161	146	212	32	22	16	0.41	60	F07/F12	18
6	150	76	150	219	172	238	32	22	16	1.38	125	F07/F12	25
8	200	82	198	273	221	298	51	30	22	2.2	178	F12	42
10	250	102	250	328	248	325	51	30	22	2.83	225	F12	60
12	300	102	300	385	273	353	51	30	22	4.15	278	F12/F16	76
14	350	111	335	418	343	459	64	50	12x10	4.33	311	F16	129
16	400	111	386	470	369	485	64	50	12x10	5.31	365	F16	148
18	450	127	435	534	408	524	64	50	12x10	5.98	411	F16	210
20	500	133	485	585	433	524	64	50	12x10	6.81	461	F16	237
24	600	158	585	693	521	694	102	63.5	15.9 SQ	8.31	558	F25	453

NOTES

1 For sizes not shown, contact Bray for more information.
2 K dimension is disc chordal dimension at valve face. When the valve is open, the disc may extend into the pipe on both sides of the valve. Piping must be large enough to allow the disc to clear the pipe.

© 2026 BRAY INTERNATIONAL. ALL RIGHTS RESERVED. BRAY.COM

MAXIMUM ALLOWABLE STEM TORQUE VALUES[1]

NPS[2]	DN[2]	MAST (lbf-in)	MAST (N m)
2	50	2,009	227
3	80	2,009	227
4	100	5,310	600
6	150	5,310	600
8	200	14,480	1,636
10	250	14,480	1,636
12	300	14,480	1,636
14	350	81,498	9,208
16	400	81,498	9,208
18	450	80,613	9,108
20	500	80,613	9,108
24	600	156,950	17,733

NOTES
1 Based on stem material 17-4 PH.
2 For sizes not shown, contact Bray for more information.

© 2026 BRAY INTERNATIONAL. ALL RIGHTS RESERVED. BRAY.COM

Cv VALUES

		Disc Position (Degrees)								
NPS	DN	10°	20°	30°	40°	50°	60°	70°	80°	90°
2	50	2	5	9	16	26	36	47	55	60
3	80	7	18	27	37	55	86	128	172	209
4	100	9	26	42	70	113	182	261	336	380
6	150	15	54	102	187	311	488	761	1096	1410
8	200	21	85	180	343	575	906	1423	1957	2287
10	250	38	155	307	544	895	1466	2384	3571	4459
12	300	55	180	457	790	1316	2141	3563	5819	7998
14	350	68	256	496	863	1442	2411	4005	6556	8946
16	400	86	347	689	1204	2019	3391	5788	9872	13915
18	450	92	402	824	1472	2489	4138	6952	11751	16382
20	500	111	522	1085	1938	3248	5428	9207	16167	22252
24	600	131	684	1503	2705	4580	7659	12468	21112	28052

NOTES

> Cv varies with the valve size, angle of opening and the manufacturer's valve style.
> Cv value is the volume of water in USGPM that will flow through a given restriction or valve opening with a pressure drop of one (1) psi at room temperature.
> For sizes not shown, contact Bray for more information.

Kv VALUES

		Disc Position (Degrees)								
NPS	DN	10°	20°	30°	40°	50°	60°	70°	80°	90°
2	50	2	4	7	14	22	31	40	47	52
3	80	6	16	24	32	48	74	110	149	181
4	100	8	22	36	60	98	157	226	291	329
6	150	13	47	88	162	269	422	658	948	1220
8	200	18	73	155	296	498	784	1231	1693	1978
10	250	33	134	266	471	774	1268	2062	3089	3857
12	300	47	156	396	684	1138	1852	3082	5034	6919
14	350	59	222	429	746	1247	2085	3465	5672	7739
16	400	74	300	596	1041	1746	2933	5007	8540	12037
18	450	80	347	712	1273	2153	3579	6013	10165	14171
20	500	96	451	939	1677	2810	4696	7964	13985	19249
24	600	114	591	1300	2340	3962	6626	10786	18263	24267

NOTES

> Kv varies with the valve size, angle of opening and the manufacturer's valve style.
> Kv value is the volume of water in cubic metres/hour (m3/hr) that will flow through a given restriction or valve opening with a pressure drop of one (1) bar at room temperature.
> For sizes not shown, contact Bray for more information.

© 2026 BRAY INTERNATIONAL. ALL RIGHTS RESERVED. BRAY.COM

FLANGE TO VALVE BOLTING DATA - LONG BODY WAFER

The bolting and stud lengths provided below are recommended values based on the assumptions listed and must be independently verified by the customer for suitability with the actual system specifications, component dimensions, and applicable tolerances prior to installation.

LONG BODY WAFER | THROUGH STUD | BOLTING DIAGRAM

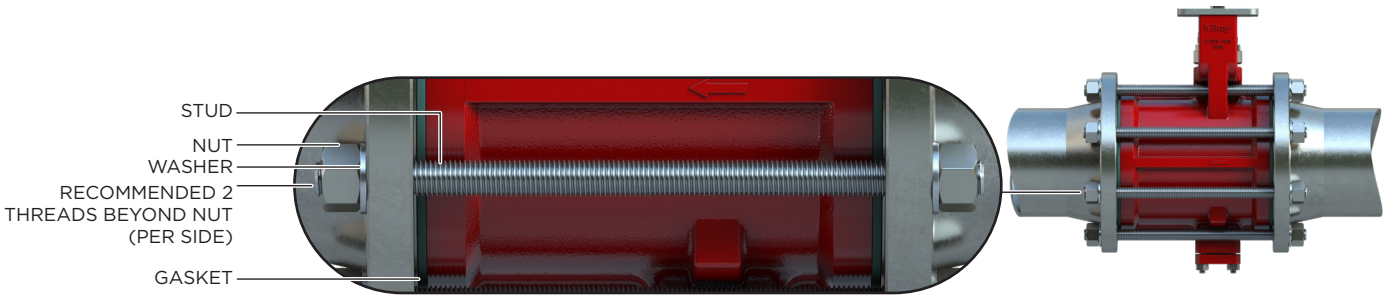

LONG BODY WAFER | THROUGH STUD | WITH WASHER

Length of Stud	=	Valve Face to Face	+	Flange Thickness x2	+	Raised Face x2	+	Gasket Thickness x2	+	Nut Thickness x2	+	Washer Thickness x2	+	2 Thread Protrusion x2

Valve Size		Fastener Size	Length		Stud	Washer	Nut
NPS	DN	Ø - thread	(in)	(mm)	Qty	Qty	Qty
2	50	5/8-11UNC	7.00	178	4	8	8
3	80	5/8-11UNC	9.00	229	4	8	8
4	100	5/8-11UNC	10.25	260	8	16	16
6	150	3/4-10UNC	13.75	349	8	16	16

LONG BODY WAFER | THROUGH STUD | WITHOUT WASHER

Length of Stud	=	Valve Face to Face	+	Flange Thickness x2	+	Raised Face x2	+	Gasket Thickness x2	+	Nut Thickness x2	+	2 Thread Protrusion x2

Valve Size		Fastener Size	Length		Stud	Nut
NPS	DN	Ø - Thread	inch	mm	Qty	Qty
2	50	5/8-11UNC	6.75	171	4	8
3	80	5/8-11UNC	8.75	222	4	8
4	100	5/8-11UNC	10.00	254	8	16
6	150	3/4-10UNC	13.50	343	8	16

IMPORTANT INFORMATION AND ASSUMPTIONS

> The Bray Series 39 is designed to mount between ASME B16.5 flanges. It is very important that the correct sized studs are used to ensure proper installation.
> Use appropriate flange bolt torques when fitting the valve into line.
> Wafer style valves include locating holes to match ASME B16.5 flanges to assist in positive alignment. Double-flanged valves shall be aligned with the adjacent ASME flanges.
> Lengths rounded to the nearest 1/4" for maximum thread engagement.
> Nut thickness as per ASME B18.2.2 Heavy Hex.
> Washer thickness as per ASME B18.22.1 Type A.
> Flange thickness as per ASME B16.5 or ASME B16.47 Series A.
> Gasket thickness .175".
> Raised Face .06".

© 2026 BRAY INTERNATIONAL. ALL RIGHTS RESERVED. BRAY.COM

The bolting and stud lengths provided below are recommended values based on the assumptions listed and must be independently verified by the customer for suitability with the actual system specifications, component dimensions, and applicable tolerances prior to installation.

SHORT BODY WAFER | THROUGH STUD | BOLTING DIAGRAM



SHORT BODY WAFER | THROUGH STUD | WITH WASHER

Length of Stud	=	Valve Face to Face	+	Flange Thickness x2	+	Raised Face x2	+	Gasket Thickness x2	+	Nut Thickness x2	+	Washer Thickness x2	+	2 Thread Protrusion x2

Valve Size		Fastener Size	Length		Studs	Washer	Nut
NPS	DN	Ø - Thread	inch	mm	Qty	Qty	Qty
2	50	5/8-11UNC	6.50	165	4	8	8
3	80	5/8-11UNC	7.25	184	4	8	8
4	100	5/8-11UNC	7.50	191	8	16	16
6	150	3/4-10UNC	7.75	197	8	16	16
8	200	3/4-10UNC	8.25	210	8	16	16
10	250	7/8-9UNC	9.50	241	12	24	24
12	300	7/8-9UNC	9.75	248	12	24	24
14	350	1-8UNC	10.50	267	12	24	24
16	400	1-8UNC	10.50	267	16	32	32
18	450	1-1/8-8UN	11.75	298	16	32	32
20	500	1-1/8-8UN	12.25	311	20	40	40
24	600	1-1/4-8UN	14.00	356	20	40	40

SHORT BODY WAFER | THROUGH STUD | WITHOUT WASHER

Length of Stud	=	Valve Face to Face	+	Flange Thickness x2	+	Raised Face x2	+	Gasket Thickness x2	+	Nut Thickness x2	+	2 Thread Protrusion x2

Valve Size		Fastener Size	Length		Stud	Nut
NPS	DN	Ø - Thread	inch	mm	Qty	Qty
2	50	5/8-11UNC	6.25	159	4	8
3	80	5/8-11UNC	6.75	171	4	8
4	100	5/8-11UNC	7.00	178	8	16
6	150	3/4-10UNC	7.50	191	8	16
8	200	3/4-10UNC	8.00	203	8	16
10	250	7/8-9UNC	9.00	229	12	24
12	300	7/8-9UNC	9.25	235	12	24
14	350	1-8UNC	10.00	254	12	24
16	400	1-8UNC	10.25	260	16	32
18	450	1-1/8-8UN	11.25	286	16	32
20	500	1-1/8-8UN	12.00	305	20	40
24	600	1-1/4-8UN	13.50	343	20	40

IMPORTANT INFORMATION AND ASSUMPTIONS

> The Bray Series 39 is designed to mount between ASME B16.5 flanges. It is very important that the correct sized studs are used to ensure proper installation.
> Use appropriate flange bolt torques when fitting the valve into line.
> Wafer style valves include locating holes to match ASME B16.5 flanges to assist in positive alignment. Double-flanged valves shall be aligned with the adjacent ASME flanges.
> Lengths rounded to the nearest 1/4" for maximum thread engagement. Nut thickness as per ASME B18.2.2 Heavy Hex.
> Washer thickness as per ASME B18.22.1 Type A. Flange thickness as per ASME B16.5 or ASME B16.47 Series A.
> Gasket thickness .175". Raised Face .06".

© 2026 BRAY INTERNATIONAL. ALL RIGHTS RESERVED. BRAY.COM

The bolting and stud lengths provided below are recommended values based on the assumptions listed and must be independently verified by the customer for suitability with the actual system specifications, component dimensions, and applicable tolerances prior to installation.

LONG BODY FLANGED | STUD | BOLTING DIAGRAM

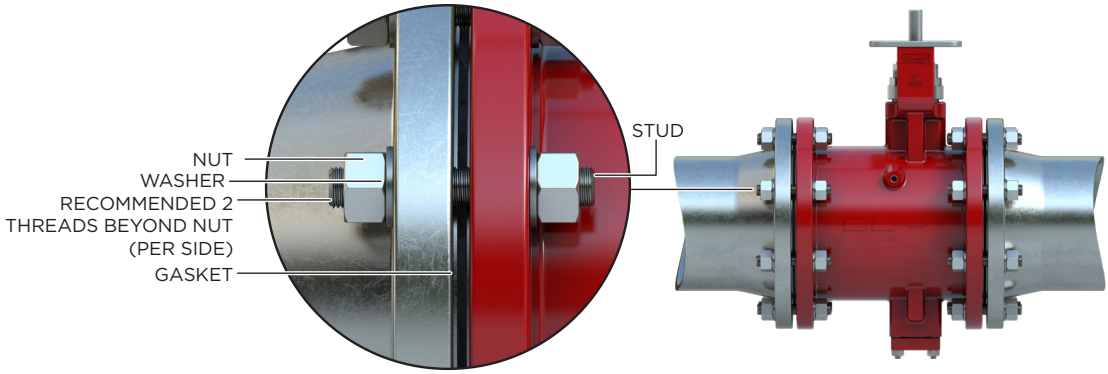

LONG BODY FLANGED | STUD | WITH WASHER

Length of Stud	=	Valve Flange Thickness	+	Pipe Flange Thickness	+	Raised Face x2	+	Gasket Thickness	+	Nut Thickness x2	+	Washer Thickness x2	+	2 Thread Protrusion x2

Valve Size		Fastener Size	Length		Stud	Washer	Nut
NPS	DN	Ø - Thread	inch	mm	Qty	Qty	Qty
8	200	3/4-10UNC	4.75	121	16	32	32
10	250	7/8-9UNC	5.25	133	24	48	48
12	300	7/8-9UNC	5.50	140	24	48	48
14	350	1-8UNC	5.75	146	24	48	48
16	400	1-8UNC	6.00	152	32	64	64
18	450	1-1/8-8UN	6.50	165	32	64	64
20	500	1-1/8-8UN	6.75	171	40	80	80
24	600	1-1/4-8UN	7.50	191	40	80	80

LONG BODY FLANGED | STUD | WITHOUT WASHER

Length of Stud	=	Valve Flange Thickness	+	Pipe Flange Thickness	+	Raised Face x2	+	Gasket Thickness	+	Nut Thickness x2	+	2 Thread Protrusion x2

Valve Size		Fastener Size	Length		Stud	Nut
NPS	DN	Ø - Thread	inch	mm	Qty	Qty
8	200	3/4-10UNC	4.50	114	16	32
10	250	7/8-9UNC	4.75	121	24	48
12	300	7/8-9UNC	5.00	127	24	48
14	350	1-8UNC	5.50	140	24	48
16	400	1-8UNC	5.75	146	32	64
18	450	1-1/8-8UN	6.00	152	32	64
20	500	1-1/8-8UN	6.50	165	40	80
24	600	1-1/4-8UN	7.00	178	40	80

IMPORTANT INFORMATION AND ASSUMPTIONS

> The Bray Series 39 is designed to mount between ASME B16.5 flanges. It is very important that the correct sized bolts are used to ensure proper installation.
> Use appropriate flange bolt torques when fitting the valve into line.
> Wafer style valves include locating holes to match ASME B16.5 flanges to assist in positive alignment. Double-flanged valves shall be aligned with the adjacent ASME flanges.
> Lengths rounded to the nearest 1/4" for maximum thread engagement.
> Nut thickness as per ASME B18.2.2 Heavy Hex.
> Washer thickness as per ASME B18.22.1 Type A.
> Flange thickness as per ASME B16.5 or ASME B16.47 Series A.
> Gasket thickness .175".
> Raised Face .06".

© 2026 BRAY INTERNATIONAL. ALL RIGHTS RESERVED. BRAY.COM

The bolting and stud lengths provided below are recommended values based on the assumptions listed and must be independently verified by the customer for suitability with the actual system specifications, component dimensions, and applicable tolerances prior to installation.

LONG BODY FLANGED | BOLT | BOLTING DIAGRAM

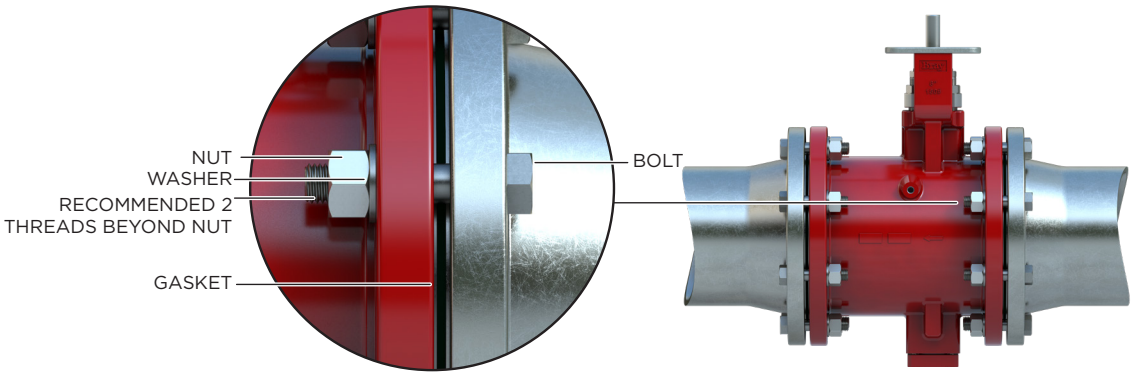

LONG BODY FLANGED | BOLT | WITH WASHER

Length of Bolt	=	Valve Flange Thickness	+	Pipe Flange Thickness	+	Raised Face x2	+	Gasket Thickness	+	Nut Thickness	+	Washer Thickness	+	2 Thread Protrusion

Valve Size		Fastener Size	Length		Bolt	Washer	Nut
NPS	DN	Ø - Thread	inch	mm	Qty	Qty	Qty
8	200	3/4-10UNC	3.75	95	16	32	16
10	250	7/8-9UNC	4.00	102	24	48	24
12	300	7/8-9UNC	4.25	108	24	48	24
14	350	1-8UNC	4.50	114	24	48	24
16	400	1-8UNC	4.75	121	32	64	32
18	450	1-1/8-8UN	5.00	127	32	64	32
20	500	1-1/8-8UN	5.25	133	40	80	40
24	600	1-1/4-8UN	6.00	152	40	80	40

LONG BODY FLANGED | BOLT | WITHOUT WASHER

Length of Bolt	=	Valve Flange Thickness	+	Pipe Flange Thickness	+	Raised Face x2	+	Gasket Thickness	+	Nut Thickness	+	2 Thread Protrusion

Valve Size		Fastener Size	Length		Bolt	Nut
NPS	DN	Ø - Thread	inch	mm	Qty	Qty
8	200	3/4-10UNC	3.50	89	16	16
10	250	7/8-9UNC	3.75	95	24	24
12	300	7/8-9UNC	4.00	102	24	24
14	350	1-8UNC	4.25	108	24	24
16	400	1-8UNC	4.50	114	32	32
18	450	1-1/8-8UN	4.75	121	32	32
20	500	1-1/8-8UN	5.25	133	40	40
24	600	1-1/4-8UN	5.75	146	40	40

IMPORTANT INFORMATION AND ASSUMPTIONS

> The Bray Series 39 is designed to mount between ASME B16.5 flanges. It is very important that the correct sized bolts are used to ensure proper installation.
> Use appropriate flange bolt torques when fitting the valve into line.
> Wafer style valves include locating holes to match ASME B16.5 flanges to assist in positive alignment. Double-flanged valves shall be aligned with the adjacent ASME flanges.
> Lengths rounded to the nearest 1/4" for maximum thread engagement.
> Nut thickness as per ASME B18.2.2 Heavy Hex.
> Washer thickness as per ASME B18.22.1 Type A.
> Flange thickness as per ASME B16.5 or ASME B16.47 Series A.
> Gasket thickness .175".
> Raised Face .06".

© 2026 BRAY INTERNATIONAL. ALL RIGHTS RESERVED. BRAY.COM

SINCE 1986, BRAY HAS PROVIDED FLOW CONTROL SOLUTIONS FOR A VARIETY OF INDUSTRIES AROUND THE WORLD.

VISIT **BRAY.COM** TO LEARN MORE ABOUT BRAY PRODUCTS AND LOCATIONS NEAR YOU.

HEADQUARTERS

Bray International, Inc.
13333 Westland East Blvd.
Houston, Texas 77041
Tel: +1.281.894.5454

All statements, technical information, and recommendations in this bulletin are for general use only. Consult Bray representatives or factory for the specific requirements and material selection for your intended application. The right to change or modify product design or product without prior notice is reserved. Patents issued and applied for worldwide.
Bray® is a registered trademark of Bray International, Inc.

© 2026 BRAY INTERNATIONAL. ALL RIGHTS RESERVED. BRAY.COM

EN_S39_TSM_20261124

Bray®

THE HIGH PERFORMANCE COMPANY

BRAY.COM