SERIES 39

SLURRY CONTROL VALVE

Installation, Operation, and Maintenance Manual

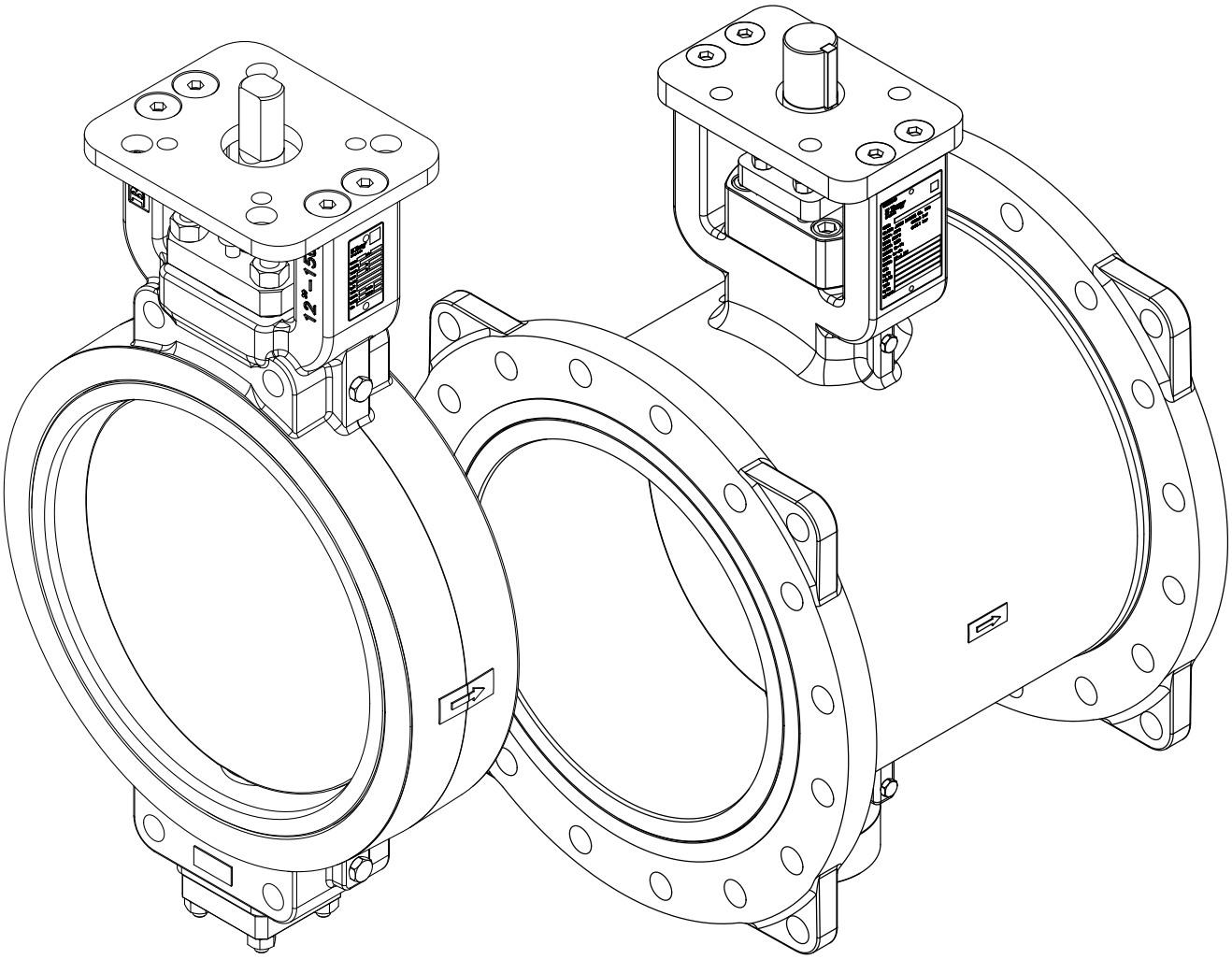

Bray®

BRAY.COM

THE HIGH PERFORMANCE COMPANY

CONTENTS

1.0 DEFINITION OF TERMS 3
2.0 INTRODUCTION 4
3.0 PARTS IDENTIFICATION 5
4.0 VALVE IDENTIFICATION 7
5.0 QUALIFIED PERSONNEL 8
6.0 HANDLING REQUIREMENTS 9
7.0 STORAGE 10
8.0 LIFTING 12
9.0 INSTALLATION CONSIDERATIONS 13
10.0 INSTALLATION PROCEDURE 19
11.0 OPERATION 22
12.0 ACTUATOR REMOVAL AND REMOUNTING 23
13.0 MAINTENANCE 24
14.0 GLAND PACKING REPLACEMENT 26
15.0 VALVE DISASSEMBLY 28
16.0 VALVE ASSEMBLY 29
17.0 PARTS & APPENDICES 36
18.0 TROUBLESHOOTING 37
19.0 RETURN MERCHANDISE AUTHORIZATION 38

© 2026 BRAY INTERNATIONAL, INC. ALL RIGHTS RESERVED. BRAY.COM The Information contained herein shall not be copied, transferred, conveyed, or displayed in any manner that would violate its proprietary nature without the express written permission of Bray International, Inc.

READ AND FOLLOW THESE INSTRUCTIONS CAREFULLY.
SAVE THIS MANUAL FOR FUTURE USE.
FOR THE LATEST IOM VERSION, VISIT BRAY.COM

1.0 DEFINITION OF TERMS

1.1 All information within this manual is relevant to the safe operation and proper care of your Bray valve. Please read the following examples of information used throughout this manual.

X.X IDENTIFIES CHAPTER HEADING

X.XX Identifies and explains sequential procedure to be performed.

NOTE: Provides important information, useful tips, and recommendations related to a procedure.

SAFETY STATEMENTS

The terms DANGER, WARNING, CAUTION, and NOTICE are used in this document to prevent unwanted consequences. Standard symbols and classifications are:



DANGER

Indicates an immediate hazardous situation which, if not avoided, **will** result in death or serious injury and/or property damage.



WARNING

Indicates a potentially hazardous situation which, if not avoided, **could** result in death or serious injury and/or property damage.



CAUTION

Indicates a potentially hazardous situation which, if not avoided, **may** result in minor or moderate injury and/or property damage.



NOTICE

Indicates and provides additional technical information which may not be obvious, even to qualified personnel. The term is not used for personal injury hazards or warnings, but can be used to indicate possible equipment or property damage.

1.2 Compliance with other notes — regarding transport, assembly, operation & maintenance, and about technical documentation (e.g., in the operating instructions, product documentation, or on the product itself) — is essential, to avoid faults which can directly or indirectly cause severe personal injury or property damage.

© 2026 BRAY INTERNATIONAL, INC. ALL RIGHTS RESERVED. BRAY.COM The Information contained herein shall not be copied, transferred, conveyed, or displayed in any manner that would violate its proprietary nature without the express written permission of Bray International, Inc.

2.0 INTRODUCTION

2.1 Purpose

This Installation, Operation & Maintenance Manual provides requirements and procedures for the receiving, handling, installation, inspection, and maintenance of the Bray Series 39 Slurry Control Valve.

2.2 General Safety Warning

Read and understand this manual in its entirety before installation, operation, inspection, or maintenance. Failure to follow the instructions and requirements contained in this manual may result in improper installation, product damage, property damage, serious personal injury, or death.

2.3 Scope and Intended Use

This manual applies only to the Bray Series 39 valves identified herein and is intended for qualified personnel receiving, handling, installing, inspecting, testing, or maintaining these products.

Products shall be used only with compatible pipe, fittings, and other mating components that meet applicable material, dimensional, and end-preparation requirements. Products shall be selected and installed within their published pressure, temperature, material, dimensional, and application limitations.

Always follow applicable codes, standards, project specifications, and accepted piping practices. Do not exceed published product ratings or tolerances.

2.4 System Design and Application Responsibility

Bray is not responsible for the design of the piping system in which Bray Series 39 valves are installed and assumes no responsibility for improper system design. System design, product selection, and application are the responsibility of the system designer or other qualified party.

Bray Series 39 valves shall be selected and applied in accordance with published product ratings, limitations, and applicable system requirements.

2.5 Related Documentation

Refer to the applicable product technical data sheets for product-specific dimensions, materials, ratings, size ranges, and approvals.

© 2026 BRAY INTERNATIONAL, INC. ALL RIGHTS RESERVED. BRAY.COM The Information contained herein shall not be copied, transferred, conveyed, or displayed in any manner that would violate its proprietary nature without the express written permission of Bray International, Inc.

3.0 PARTS IDENTIFICATION

3.1 Series 39 NPS 2-12 | DN 50 - 300

ITEM	DESCRIPTION
1	Body
2	Liner
3	Disc
4	Upper Hub Spacer
4a	Lower Hub Spacer
5	Stem
6	Upper Stem Seal Housing
6a	Lower Stem Seal Housing
7	Upper Stem Seal
7a	Lower Stem Seal
8	Upper Stem Seal Spacer
8a	Lower Stem Seal Spacer
9	Upper Bearing
9a	Lower Bearing
10	Upper Stem Seal Spring
10a	Lower Stem Seal Spring
11	Bonnet Gasket
11a	End Cover Gasket
12	Bonnet
12a	End Cover
13	Thrust Washer
14	Gland Packing
15	Gland Ring
16	Gland Retainer
17	Top Plate
18	Top Plate Screw
19	Bonnet Stud
19a	End Cover Stud
20	Bonnet Nut
20a	End Cover Nut
21	Gland Stud
22	Gland Nut
23	Identification Tag
24	Drive Screw
25	NPT Plug

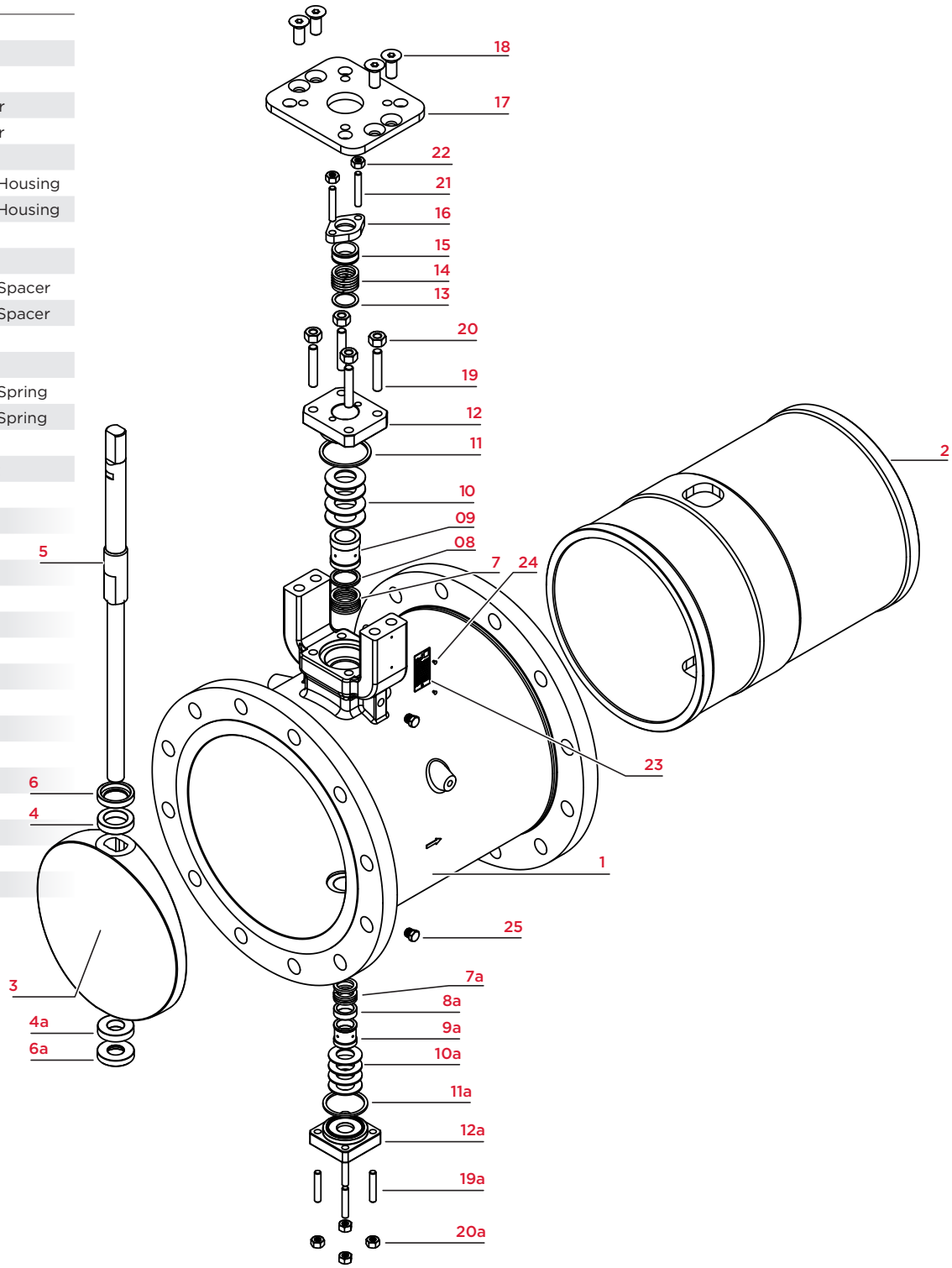

© 2026 BRAY INTERNATIONAL, INC. ALL RIGHTS RESERVED. BRAY.COM The Information contained herein shall not be copied, transferred, conveyed, or displayed in any manner that would violate its proprietary nature without the express written permission of Bray International, Inc.

3.2 Series 39 NPS 14-24 | DN 350-600

ITEM	DESCRIPTION
1	Body
2	Liner
3	Disc
4	Upper Hub Spacer
4a	Lower Hub Spacer
5	Stem
6	Upper Stem Seal Housing
6a	Lower Stem Seal Housing
7	Upper Stem Seal
7a	Lower Stem Seal
8	Upper Stem Seal Spacer
8a	Lower Stem Seal Spacer
9	Upper Bearing
9a	Lower Bearing
10	Upper Stem Seal Spring
10a	Lower Stem Seal Spring
11	Bonnet Gasket
11a	End Cover Gasket
12	Bonnet
12a	End Cover
13	Thrust Washer
14	Gland Packing
15	Gland Ring
16	Gland Retainer
17	Top Plate
18	Top Plate Screw
19	Bonnet Cap Screw
19a	End Cover Cap Screw
21	Gland Stud
22	Gland Nut
23	Identification Tag
24	Drive Screw
25	NPT Plug
26	Square Key
27	Gland Packing Springs

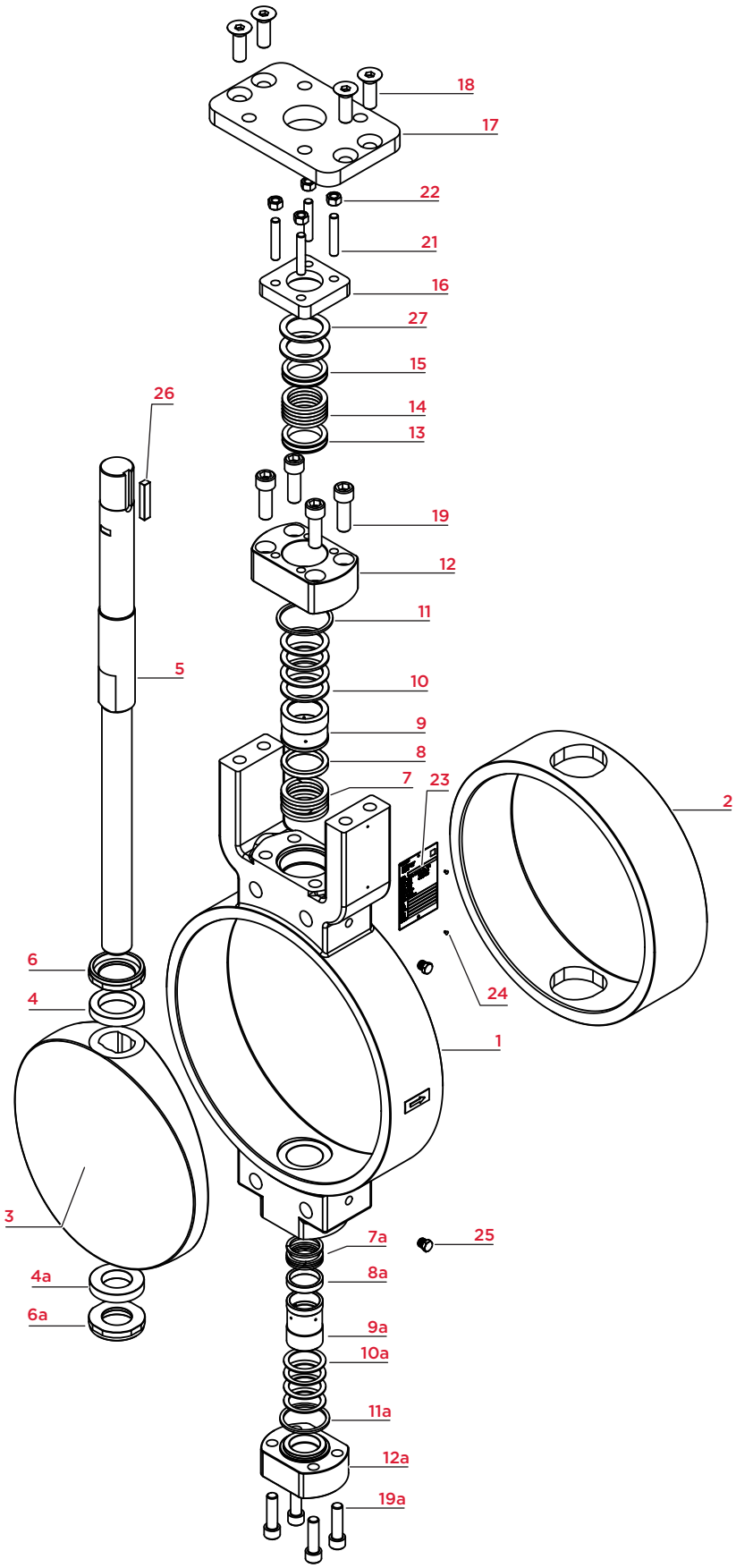

© 2026 BRAY INTERNATIONAL, INC. ALL RIGHTS RESERVED. BRAY.COM The Information contained herein shall not be copied, transferred, conveyed, or displayed in any manner that would violate its proprietary nature without the express written permission of Bray International, Inc.

4.0 VALVE IDENTIFICATION

NOTICE

> Ensure the box is not damaged externally.
> Remove the valve from the packaging and check for any damage to the valve and its components during transit.
> Report any damage or discrepancies immediately.
> Every valve has an identification tag and must not be removed or covered, so that the installed valve remains identifiable.
> Depending on the region, the valve identification tag may vary.

4.1 All valves, actuators, or control products are provided with an identification tag that is unique to each device.

All Series 39 Slurry Control Valves feature a digital valve identification tag. The electronic tagging system — **Bray DIGI-ID™** — ensures that each valve is uniquely and easily identifiable by simply scanning the QR Code on the product identification tag. This allows the operator to gain instant access to all relevant product information. This solution is in accordance with the DIN EN IEC 61406 (DIN Spec 91406) standard.

Scan code for more information about Bray DIGI-ID™

© 2026 BRAY INTERNATIONAL, INC. ALL RIGHTS RESERVED. BRAY.COM The Information contained herein shall not be copied, transferred, conveyed, or displayed in any manner that would violate its proprietary nature without the express written permission of Bray International, Inc.

5.0 QUALIFIED PERSONNEL

NOTICE

Failure to follow these procedures could affect product warranty.

5.1 A **qualified person** in terms of this document is one who is familiar with the installation, commissioning, and operation of the device and who has appropriate qualifications, such as:

> Is trained in the operation and maintenance of electrical and mechanical equipment and systems in accordance with established safety practices.

> Is trained or authorized to energize, de-energize, ground, tag, and lock electrical circuits and equipment in accordance with established safety practices.

> Is trained in the proper use and care of personal protective equipment (PPE) in accordance with established safety practices.

> In cases where the device is installed in a potentially explosive (hazardous) location — is trained in the commissioning, operation, and maintenance of equipment in hazardous locations.

5.2 **Additional information** about the Series 39 Slurry Control Valve — including application data, engineering specifications, and actuator selection — is available from your local Bray distributor or sales representative.

© 2026 BRAY INTERNATIONAL, INC. ALL RIGHTS RESERVED. BRAY.COM The Information contained herein shall not be copied, transferred, conveyed, or displayed in any manner that would violate its proprietary nature without the express written permission of Bray International, Inc.

6.0 HANDLING REQUIREMENTS

WARNING

A potential hazard exists with handling valves. Failure to handle valves properly may cause a valve to shift, slip or fall causing serious injury or death and/or equipment damage.

CAUTION

Must be taken during handling to avoid this equipment passing over workers, or over any other place where a possible fall could cause injury or damage.

For handling and/or lifting, the lifting equipment (fasteners, hooks, etc.) must be sized and selected while taking into account the product weight indicated in our packing list and/or delivery note. Lifting and handling must be performed only by qualified personnel.

Fasteners must be protected by plastic covers in sharp corner areas.

In all cases, local safety regulations must be respected.

6.1 Packed Valves

Crates: Lifting and handling of the packed valves in crates will be carried out by a fork lift truck, by means of the appropriate fork hitches.

Cases: The lifting of packed valves in cases will be carried out in the lifting points and in the center of gravity position which has been marked. The transportation of all packed material must be carried out safely and following the local safety regulations.

6.2 Unpacked Valves

Lifting and handling of valves should be carried out by using appropriate means and observing carrying limits. Handling must be carried out on pallets, protecting all machined surfaces to avoid any damage.

With large bore valves, rigging the load must be carried out by using the appropriate tools to prevent the valve from falling or moving during the lifting and handling.

© 2026 BRAY INTERNATIONAL, INC. ALL RIGHTS RESERVED. BRAY.COM The Information contained herein shall not be copied, transferred, conveyed, or displayed in any manner that would violate its proprietary nature without the express written permission of Bray International, Inc.

7.0 STORAGE

NOTICE

The packaging is designed to protect the valve only during shipping. If you are not installing the valve immediately after delivery, then you must store it according to these requirements.

Failure to follow these procedures could affect product warranty.

7.1 Short-Term Storage

Short-term storage is defined as storage of valves to allow for project construction and will be installed within a relatively short amount of time (typically one to three months). During short-term storage, the following is required:

The preferred storage location is a clean, dry, protected warehouse. Do not expose the valve to temperature extremes.

End protectors shall remain on the valve ends to prevent the entrance of dirt, debris, or insects/wildlife and should only be removed at the time of valve installation.

Goods shall remain in the original shipping container with the original packaging materials. This packaging method will not protect valves that will be stored outside, uncovered, and unprotected.

Storage of valves in an open, uncovered area is permissible, but requires provisions for inclement weather. The product must elevated from the ground on a pallet, a shelf, or other suitable surface, and must be covered with a secure, waterproof tarp.

CAUTION

Do not stack the valves on top of each other.

Manually actuated valves may be stored in the vertical or horizontal position. For air or hydraulic actuated valves, the preferred orientation is with the valve and cylinder in the vertical position. Access ports should be secured to prevent unauthorized entry and prevent contamination.

7.2 Long-Term Storage

Long-term storage is defined as storage of valves longer than three months. During long-term storage, the following is required:

The storage location shall be a clean, dry, protected warehouse. Do not expose the valve to temperature extremes.

End protectors shall remain on the valve ends to prevent the entrance of dirt, debris, or insects/wildlife and should only be removed at the time of valve installation.

© 2026 BRAY INTERNATIONAL, INC. ALL RIGHTS RESERVED. BRAY.COM The Information contained herein shall not be copied, transferred, conveyed, or displayed in any manner that would violate its proprietary nature without the express written permission of Bray International, Inc.

Product shall remain in the original shipping container with the original packaging materials.

CAUTION

Do not stack the valves on top of each other.

Manually actuated valves may be stored in the vertical or horizontal position. For air or hydraulic actuated valves, the preferred orientation is with the valve and cylinder in the vertical position. Access ports should be secured to prevent unauthorized entry and prevent contamination.

Valves and equipment containing elastomers, including o-rings, must be stored in a climate-controlled warehouse according to SAE-ARP5316D requiring:

> The ambient relative humidity to be less than 75%.

> No exposure from direct ultraviolet or sunlight.

> Protection from ozone generating equipment or combustible gases and vapors.

> Storage at temperatures below 100°F (38°C), away from direct sources of heat. Preferred temperature range from 40°F to 85°F (4°C to 29°C). If a component is cooled below 59°F (15°C), the entire valve assembly should be allowed to rise above 68°F (20°C) before installing into service.

> No exposure to ionizing radiation.

7.3 STORAGE INSPECTION

Regular visual inspection is recommended for:

> Packaging.

> Flange covers.

> Dryness.

> Cleanliness.

© 2026 BRAY INTERNATIONAL, INC. ALL RIGHTS RESERVED. BRAY.COM The Information contained herein shall not be copied, transferred, conveyed, or displayed in any manner that would violate its proprietary nature without the express written permission of Bray International, Inc.

8.0 LIFTING

WARNING

A potential hazard exists with handling valves. Failure to handle valves properly may cause a valve to shift, slip, or fall — causing serious injury or death and/or equipment damage.

NOTICE

The following information is for reference purposes only.

> Always use safe and proper techniques for lifting and support.
> Lift with properly rated lifting equipment.
> DO NOT lift valves with any adjoining pipe or other equipment attached.
> Follow jurisdictional safety requirements.

8.1 Always lift valve from the identified lifting points or valve body (**Figure 1**).

8.2 Do not lift the valve package via the actuator lifting points.

Figure 1: Approved Lifting Points

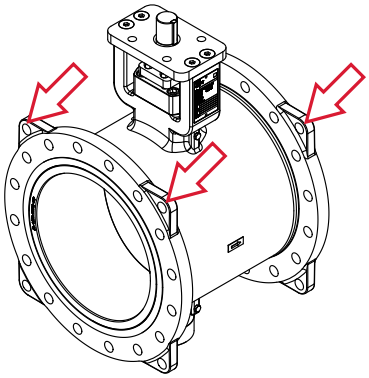

NPS 14-24 | DN 350-600 | LONG BODY FLANGED
Lifting Points:
1) Designated lifting holes

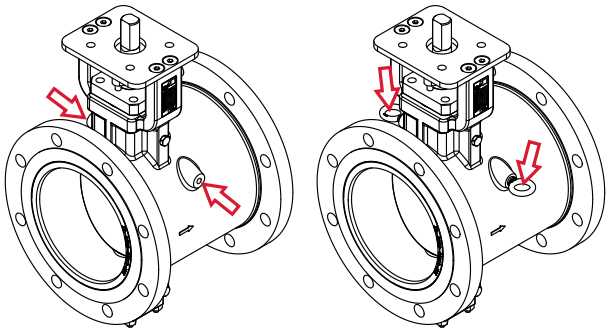

NPS 8-12 | DN 200-300 | LONG BODY FLANGED
Lifting Points:
1) Insert eyebolts (not supplied) into threaded holes
2) Flange bolt holes

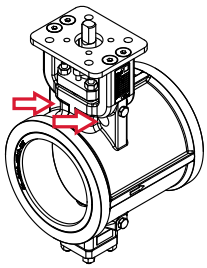

NPS 2-6 | DN 50-150 | LONG BODY WAFER
Lifting Points:
1) Flange bolt holes

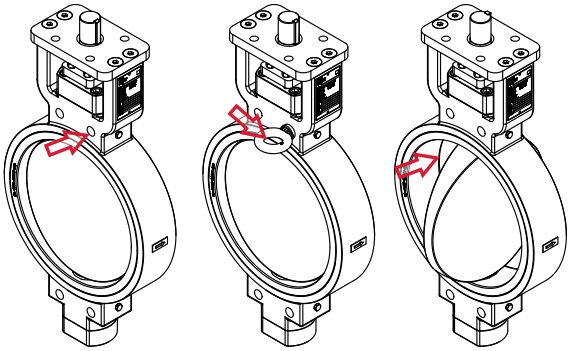

NPS 2-24 | DN 50-600 | SHORT BODY WAFER
Lifting Points:
1) Insert eyebolts (not supplied) into flange bolt holes
2) Insert straps through liner bore (with disc in open position)

© 2026 BRAY INTERNATIONAL, INC. ALL RIGHTS RESERVED. BRAY.COM The Information contained herein shall not be copied, transferred, conveyed, or displayed in any manner that would violate its proprietary nature without the express written permission of Bray International, Inc.

9.0 INSTALLATION CONSIDERATIONS

WARNING

> Only qualified personnel are allowed to install the valve.
> Verify line is depressurized before installing, removing, or repairing a valve or operator.
> Do not pressurize the line without an operator on the valve.
> The device generates a large mechanical force during normal operation.
> Observe all applicable safety regulations for valves installed in potentially explosive (hazardous) locations.

CAUTION

> Risk of crushing the hand or fingers.
> Do not operate a valve with actuator until it is installed.
> Do not operate a valve installed at the open end of a pipe section.

NOTICE

For the installation of valves in a pipeline, the same instructions apply as for the flange connection of pipes and similar pipeline elements.

The following instructions apply additionally to valves.

9.1 Piping and Flanged Compatibilities

9.1.1 Piping

These valves have been engineered so that the critical disc chordal dimension at the full open position will clear the adjacent inside diameter of most types of piping, including Schedule 40, lined pipe, heavy wall, etc.

NOTE: It is important to verify valve disc clearance with adjacent flanges and piping prior to installation.

9.1.2 Metal Flanges

Bray's Series 39 Slurry Control Valves have been designed to be suitable for ASME flanges. Proper alignment between flanges is critical to good performance. The flange bolts must also be evenly tightened around the circumference of the valve, providing consistent flange compression of the gasket.

NOTE: A uniform flange face is critical to proper valve sealing. Most weld-neck and slip-on flanges conforming to ASME specifications have an appropriate flange face.

© 2026 BRAY INTERNATIONAL, INC. ALL RIGHTS RESERVED. BRAY.COM The Information contained herein shall not be copied, transferred, conveyed, or displayed in any manner that would violate its proprietary nature without the express written permission of Bray International, Inc.

9.2 Valves with Spring Return Actuators

9.2.1 Fail Closed Assemblies

If the valve is supplied with an actuator, the disc will be in the full closed position (as no air pressure is present to compress the springs and open the disc).

9.2.2 Fail Open Assemblies

If the valve is supplied with an actuator, the disc will be in the full open position (as no air pressure is present to compress the springs and close the valve disc.) The disc edge is therefore exposed. Damage to the disc edge could effect performance.

CAUTION

Use caution installing the valve, being careful not to damage the disc edge. It is recommended to:

> Remove the actuator. Be sure to scribe the valve and actuator to ensure the re-installed actuator is in the exact same quadrant as originally configured.

> Rotate disc to the closed position.

> Install the valve per **Section 10**.

> Rotate disc to fully open position.

> Re-install the actuator ensuring it is in the proper quadrant.

© 2026 BRAY INTERNATIONAL, INC. ALL RIGHTS RESERVED. BRAY.COM The Information contained herein shall not be copied, transferred, conveyed, or displayed in any manner that would violate its proprietary nature without the express written permission of Bray International, Inc.

9.3 Valve Location

Bray Series 39 valves should be installed, if possible, a minimum of six pipe diameters from other line elements, i.e., elbows, pumps, valves, etc. When six pipe diameters are not practical, it is important to achieve as much straight pipe distance as possible.

Where the valve is connected to a check valve or pump, use an expansion joint between them to ensure the disc does not interfere with the adjacent equipment.

9.4 Valve Orientation

NOTICE

Bray does not recommend valves be installed in an upside-down position.

In general, Bray recommends the Series 39 Slurry Control Valve be installed with the stem in the horizontal position with the lower disc edge opening in the downstream direction. **(Figure 2)**

Figure 2: Valve orientation for media with sediment.

INCORRECT
Sediment buildup around lower disc and hub.

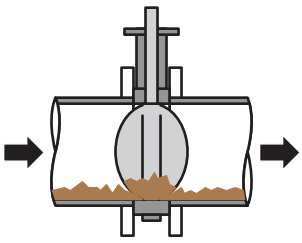

Valve Stem
(Vertical)

CORRECT
Sediment passes under disc.

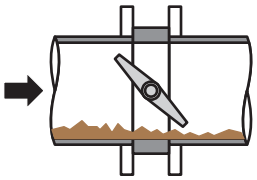

Valve Stem
(Horizontal)

9.4.1 Disc Orientation

The Series 39 valve has a single offset design. Consideration must be given to the orientation of the disc when operator/actuator is fitted. The smooth front face of the disc needs to be positioned upstream when the valve is in the closed position. The front face of the disc can be identified by the milled flat location on the stem as shown in **Figure 3**.

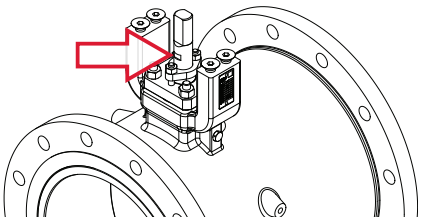

Figure 3: Disc Orientation

© 2026 BRAY INTERNATIONAL, INC. ALL RIGHTS RESERVED. BRAY.COM The Information contained herein shall not be copied, transferred, conveyed, or displayed in any manner that would violate its proprietary nature without the express written permission of Bray International, Inc.

9.4 Valve Orientation (Continued)

Series 39 Slurry Control Valves located at the discharge of a pump should be oriented as follows:

Figure 4: Centrifugal pump (with pump shaft horizontal).

INCORRECT
Valve stem horizontal.

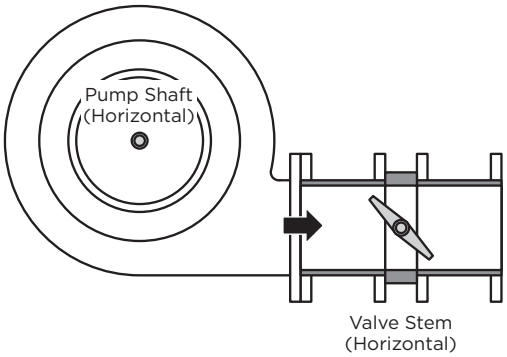

CORRECT
Valve stem vertical.

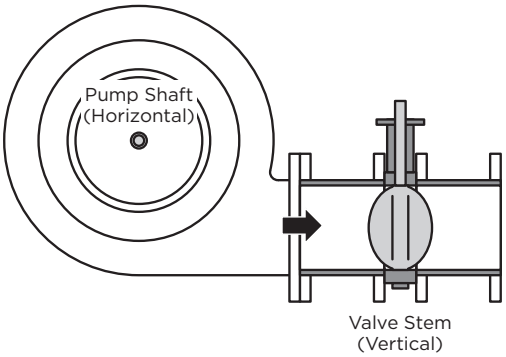

Figure 5: Centrifugal pump (with pump shaft vertical).

INCORRECT
Valve stem vertical.

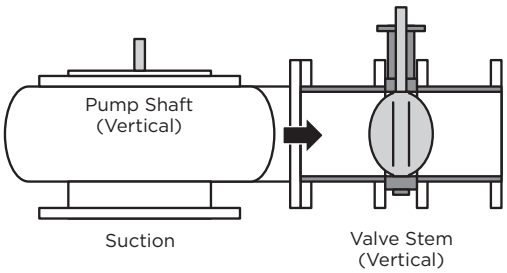

CORRECT
Valve stem horizontal.

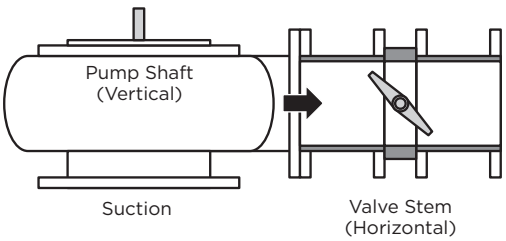

Figure 6: Axial pump (with pump shaft vertical).

INCORRECT
Valve stem horizontal.

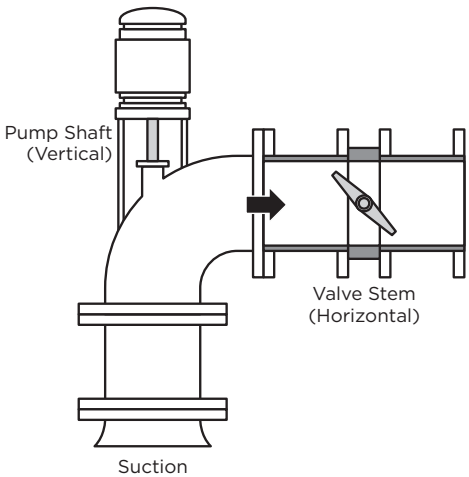

CORRECT
Valve stem vertical.

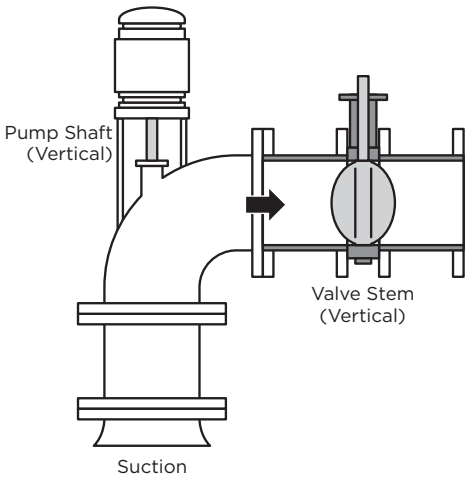

© 2026 BRAY INTERNATIONAL, INC. ALL RIGHTS RESERVED. BRAY.COM The Information contained herein shall not be copied, transferred, conveyed, or displayed in any manner that would violate its proprietary nature without the express written permission of Bray International, Inc.

9.4 Valve Orientation (Continued)

Series 39 Slurry Control Valves located at the discharge of an elbow, tee, or reducer should be oriented as follows:

Figure 7: Bend.

INCORRECT
Valve stem horizontal.

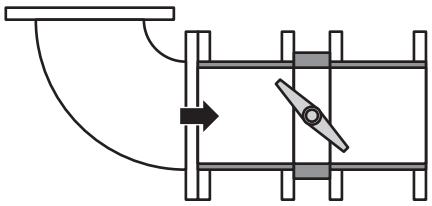

Valve Stem
(Horizontal)

CORRECT
Valve stem vertical.

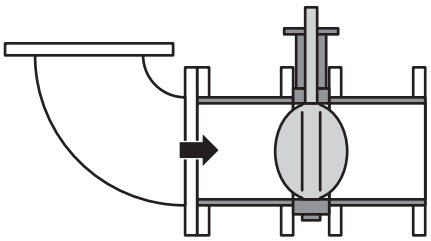

Valve Stem
(Vertical)

Figure 8: Tee.

INCORRECT
Valve stem horizontal.

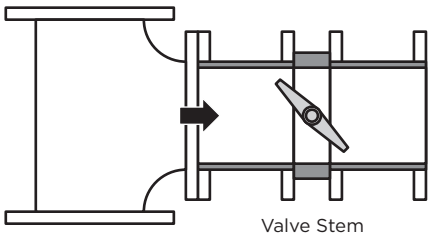

Valve Stem
(Horizontal)

CORRECT
Valve stem vertical.

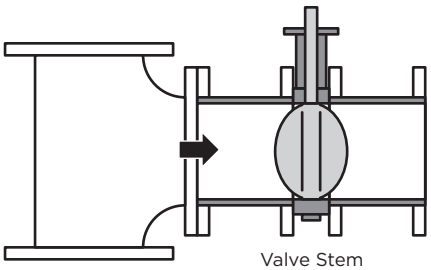

Valve Stem
(Vertical)

Figure 9: Reducer.

INCORRECT
Valve stem horizontal.

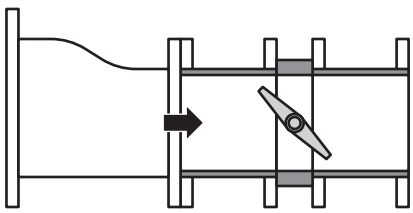

Valve Stem
(Horizontal)

CORRECT
Valve stem vertical.

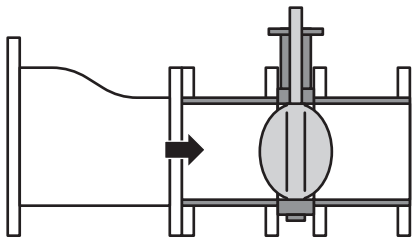

Valve Stem
(Vertical)

© 2026 BRAY INTERNATIONAL, INC. ALL RIGHTS RESERVED. BRAY.COM The Information contained herein shall not be copied, transferred, conveyed, or displayed in any manner that would violate its proprietary nature without the express written permission of Bray International, Inc.

9.4 Valve Orientation (Continued)

Series 39 Slurry Control Valves installed in series with isolation valves should be oriented as follows:

Figure 10: Control/Isolation combination.

INCORRECT

Combination with all valve stems in the same direction accelerates possible noise, vibration, and erosion problems.

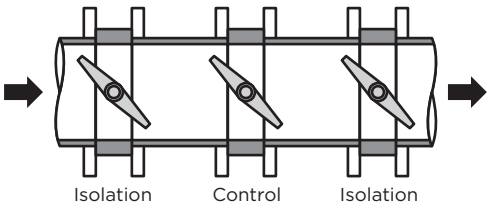

CORRECT

Combination with the stem of the control valve at right angle to those of other valves tends to cancel the drift of the fluid, and reduces noise, vibration, and erosion.

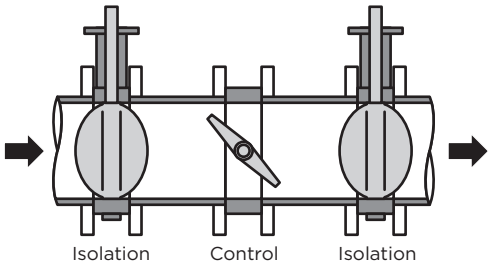

© 2026 BRAY INTERNATIONAL, INC. ALL RIGHTS RESERVED. BRAY.COM The Information contained herein shall not be copied, transferred, conveyed, or displayed in any manner that would violate its proprietary nature without the express written permission of Bray International, Inc.

10.0 INSTALLATION PROCEDURE

10.1 General Installation

10.1.1 Make sure the pipeline and pipe flange faces are clean. Any foreign material such as pipe scale, metal chips, welding slag, welding rods, etc., can obstruct disc movement or damage the disc or liner.

10.1.2 Gaskets should conform to the requirements of the specific site where the valve is being installed. In most instances the abrasive nature of the process fluid will determine the type of the gasket material used. API standard spiral wound gaskets conforming to ASME B16.5 or B16.20 are acceptable but may not necessarily give the best results. In uncertain cases, defer to the senior plant engineer at the specific site to advise on the most appropriate product to use in the given application.

10.1.3 Ensure that the valve disc has been positioned to the closed position.

10.1.4 Align the piping, then spread the pipe flanges a distance apart to permit the valve body to be easily placed between the flanges without contacting the pipe flanges. **(Figure 10)**

Figure 11: Spread flanges apart for valve clearance.

INCORRECT

Pipe not spread; disc opened beyond valve body face.

Results: Disc edge damaged when it hits pipe flange.

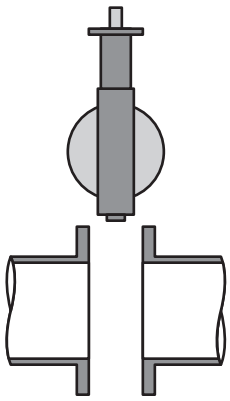

CORRECT

Pipe spread and aligned; disc rotated within body face.

Results: Disc edge protected.

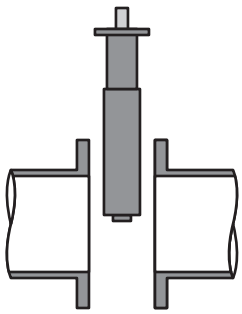

© 2026 BRAY INTERNATIONAL, INC. ALL RIGHTS RESERVED. BRAY.COM The Information contained herein shall not be copied, transferred, conveyed, or displayed in any manner that would violate its proprietary nature without the express written permission of Bray International, Inc.

10.1.5 Insert the valve between the flanges, taking care not to damage the liner faces. Install flange bolts or studs to center the valve, but do not tighten, ensuring the disc has clearance for centering. (**Figure 12**).

Figure 12: Insert and center valve.

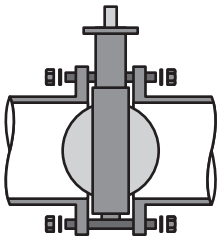

10.1.6 To check for proper alignment, carefully open the disc to the full open position, making sure the disc does not hit the adjacent pipe I.D. **(Figure 13)**

Figure 13: Check for proper alignment of valve and flanges.

INCORRECT

Piping misaligned.

Results: Disc O.D. strikes pipe I.D. causing disc edge damage, and increased torque.

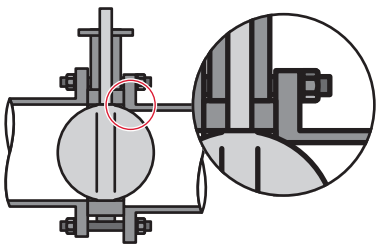

CORRECT

Piping aligned properly when bolts tightened; disc in full open position.

Results: Disc clears adjacent pipe I.D.; liner face seals properly; no excessive initial torque.

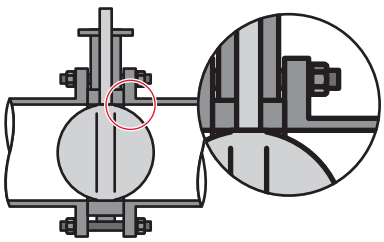

10.1.7 Now systematically remove jack bolts or other flange spreaders, and hand-tighten the flange bolts.

10.1.8 Very slowly close the valve disc to ensure disc edge clearance from the adjacent pipe flange I.D.

© 2026 BRAY INTERNATIONAL, INC. ALL RIGHTS RESERVED. BRAY.COM The Information contained herein shall not be copied, transferred, conveyed, or displayed in any manner that would violate its proprietary nature without the express written permission of Bray International, Inc.

10.1.9 Tighten all flange bolts per gasket manufacturers specification. Follow the tightening pattern shown in **Figure 14**.

10.1.10 Finally, repeat a full open to full close rotation of the disc to ensure proper clearances.

Figure 14: Flange Bolt Tightening Pattern.

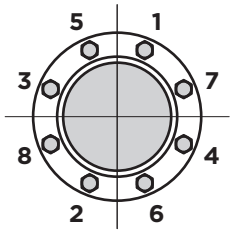

10.2 Installation Between Weld Flanges

When Series 39 valves are to be installed between welding type flanges, care should be taken to abide by the following procedure to ensure no damage will occur to the valve.

10.2.1 Place the valve between the flanges with the flange bores and valve body aligned properly. The disc should be in the closed position.

10.2.2 Span the body with studs/bolts.

10.2.3 Take this assembly of flange-body-flange and align it properly to the pipe.

10.2.4 Tack weld the flanges to the pipe.

10.2.5 When tack welding is complete, remove the bolts and the valve from the pipe flanges and complete the welding of the flanges. Be sure to let the pipe and flanges cool before installing the valve.

CAUTION

Never complete the welding process (after tacking) with the valve between pipe flanges. This may cause severe damage due to heat transfer.

© 2026 BRAY INTERNATIONAL, INC. ALL RIGHTS RESERVED. BRAY.COM The Information contained herein shall not be copied, transferred, conveyed, or displayed in any manner that would violate its proprietary nature without the express written permission of Bray International, Inc.

11.0 OPERATION

11.1 Operation

Operation of the valve is done by turning the stem a quarter-turn (90 degree turn).

> The stem is turned clockwise to close, counter-clockwise to open.

11.2 Valve Open/Closed Indication

Indication (≤ NPS 12 | DN 300)

> Valve **OPEN** position: Flats of Double-D stem are **parallel** to pipeline.

> Valve **CLOSED** position: Flats of Double-D stem are **perpendicular** to pipeline.

Figure 15: Indication of valve Open and Closed position. **(≤ NPS 12 | DN 300)**

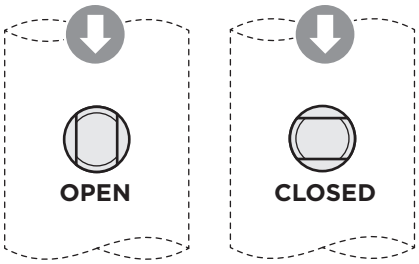

Indication (≥ NPS 14 | DN 350)

> Valve **OPEN** position: Key is **parallel** to pipeline.

> Valve **CLOSED** position: Key is **perpendicular** to pipeline.

Figure 16: Indication of valve Open and Closed position. **(≥ NPS 14 | DN 350)**

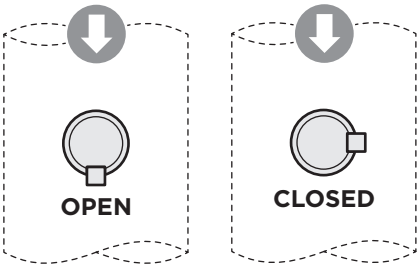

CAUTION

Valves with actuators should be inspected for actuator/valve alignment. Misalignment will result in high operational torque and damage to valve stem and seals.

© 2026 BRAY INTERNATIONAL, INC. ALL RIGHTS RESERVED. BRAY.COM The Information contained herein shall not be copied, transferred, conveyed, or displayed in any manner that would violate its proprietary nature without the express written permission of Bray International, Inc.

12.0 ACTUATOR REMOVAL AND REMOUNTING

12.1 Removing Actuator

12.1.1 Refer to relevant actuator installation, operation, and maintenance instructions before proceeding.

12.1.2 Neutralize all energy sources (electrical, pneumatic or hydraulic pressure, and mechanical).

12.1.3 Support the actuator assembly before disconnecting it from the body assembly.

12.1.4 Unbolt the actuator assembly from valve body.

12.1.5 Lift actuator assembly off stem.

12.2 Remounting Actuator

12.2.1 Before mounting an actuator on the valve body, verify that the segment rotation matches the actuator rotation and complies with the actuator failure mode requirements.

12.2.2 Slide the entire actuator assembly onto the stem.

12.2.3 Bolt actuator assembly to valve body.

12.2.4 Verify and set actuator stops.

NOTICE

Refer to the actuator IOM for necessary adjustments.

© 2026 BRAY INTERNATIONAL, INC. ALL RIGHTS RESERVED. BRAY.COM The Information contained herein shall not be copied, transferred, conveyed, or displayed in any manner that would violate its proprietary nature without the express written permission of Bray International, Inc.

13.0 MAINTENANCE

13.1 Gland Maintenance

The gland will require periodic checking. If gland leakage occurs, retighten the gland retainer nuts (22) to the values specified in **Table 1** – Torque chart. If leakage cannot be stopped by this action, the stem seals (7) or (14) or both require replacement.

NOTICE

Do not overtighten gland nuts, as this may cause increased operating torque and improper valve operation or closure.

WARNING

Reasonable precautions should be taken before working on the valve. Protective clothing and safety equipment, as required by the specific fluid, should worn.

WARNING

Do not pressurize the line without an actuator on the valve.

WARNING

Before removing the valve from the line, make sure the line is depressurized and isolated by the required site standard.

13.2 Line Removal

The Series 39 valve must be in the closed position to be removed from the line.

13.3 Valve Cleaning

After the valve is removed from the pipeline it should be cleaned (decontaminated if needed) removing all grit or scale before any work is performed. When handling the valve, care should be taken not to damage the flange sealing surfaces or tungsten carbide components.

CAUTION

The valve should not be laid on its flange sealing face unless carefully placed on a clean flat work area.

13.4 Repair Kits

Replacement parts (repair kits) are available from Bray authorized distributors. Contact your distributor or sales representative for details of price and delivery.

Refer to **Table 3** in **Section 17.**

© 2026 BRAY INTERNATIONAL, INC. ALL RIGHTS RESERVED. BRAY.COM The Information contained herein shall not be copied, transferred, conveyed, or displayed in any manner that would violate its proprietary nature without the express written permission of Bray International, Inc.

13.5. Optional Grease Fittings

13.5.1 Standard Trim

As standard the Series 39 Slurry Control Valve includes NPT grease ports which are plugged at the factory.

13.5.2 Periodic Lubrication

In most applications, additional lubrication will not be required. However if required, suitable NPT grease fittings can be connected to the grease ports to allow periodic lubrication. Contact Bray for advice prior to connecting grease fittings.

WARNING

Grease fittings shall only be connected when the valve is removed from the line, drained and depressurized. Due to the nature of the dual packing design of the Series 39 trapped pressure may exist in the bearing journals, special care should be taken to ensure this is safely relieved prior to disconnecting factory fitted NPT plugs.

WARNING

Grease fittings shall be compatible with the process media, and pressure rated at or above the valve body rating. Grease fittings shall include a check valve (internal or external) to prevent atmospheric leakage of process media.

NOTICE

Grease may come into contact with process media. Ensure selected grease is compatible with process media. Contact Bray for additional support.

© 2026 BRAY INTERNATIONAL, INC. ALL RIGHTS RESERVED. BRAY.COM The Information contained herein shall not be copied, transferred, conveyed, or displayed in any manner that would violate its proprietary nature without the express written permission of Bray International, Inc.

14.0 GLAND PACKING REPLACEMENT

NOTICE

Refer to **Section 3** for parts identification. Reference **Tables 2** and **3** to identify and order assembly tools and seal kits in **Section 17**.

14.1 Top Plate Removal

Remove actuator from the top plate. Remove top plate screws (18). Remove top plate (17) (**Figure 17**).

14.2 Gland Removal

Remove gland nuts (22). Remove gland retainer (16) and gland ring (15). Hook out gland packing (14). Remove gland studs (21) if damaged (**Figure 18/19**).

For valve sizes NPS 14-24 | DN 350-600, remove gland packing springs (27) before removing the gland ring (15).

CAUTION

When handling gland packing, care should be taken not to scratch stem or stuffing box bore.

14.3 Thrust Washer

Do not remove the thrust washer (13) unless further valve disassembly is required.

14.4 Cleaning and Inspection

Examine stuffing box bore and stem, clean as necessary to remove any corrosion or foreign matter before installing new seals.

14.5 Seal Installation

Install new seals in stuffing box one at a time (**Figure 20**). Stagger seal ring joints 180° apart when installing. Tamp each ring to bottom before installing next ring.

NOTICE

On larger valves it will be necessary to compress each seal before adding the next.

14.6 Gland Installation

Install gland studs (21) if removed previously. Slide gland ring (15) over stem (5) on top of gland packing (14) (**Figure 21**). Slide gland retainer (16) over stem (5) and onto gland studs (21). Place gland nuts (22) on gland studs (21) and tighten finger tight. Tighten gland nuts (22) evenly and alternately to the proper torque value given in **Table 1** – Torque Chart.

Sizes NPS 14-24 | DN 350-600, install gland packing springs (27) after installing the gland ring (15).

Figure 17: Top Plate Removal

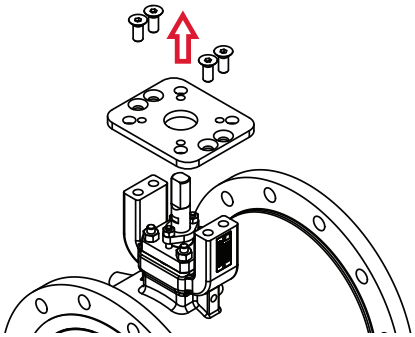

Figure 18: Gland Removal

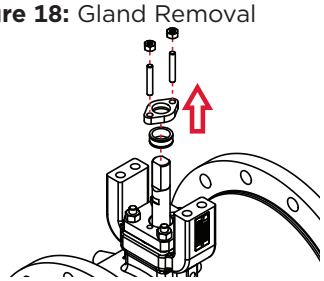

Figure 19: Gland Packing Removal

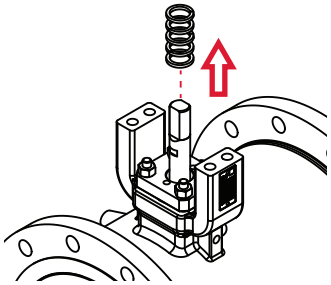

Figure 20: Gland Packing Installation

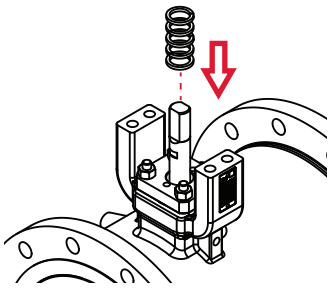

Figure 21: Gland Installation

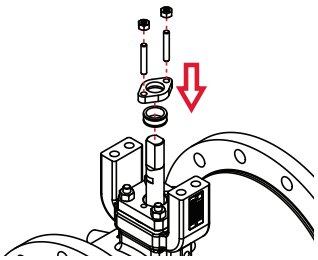

© 2026 BRAY INTERNATIONAL, INC. ALL RIGHTS RESERVED. BRAY.COM The Information contained herein shall not be copied, transferred, conveyed, or displayed in any manner that would violate its proprietary nature without the express written permission of Bray International, Inc.

14.7 Top Plate Installation

Remount top plate (17) with top plate screws (18). Mount actuator on top plate (**Figure 22**).

14.8 Valve Operational Check

Operate valve open and closed several times to check for binding and to set the stem seals. Loosen gland nuts (22) and retighten to torque value given in **Table 1** – Torque Chart.

Figure 22: Top Plate Installation

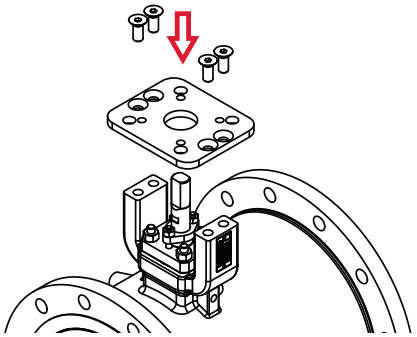

© 2026 BRAY INTERNATIONAL, INC. ALL RIGHTS RESERVED. BRAY.COM The Information contained herein shall not be copied, transferred, conveyed, or displayed in any manner that would violate its proprietary nature without the express written permission of Bray International, Inc.

15.0 VALVE DISASSEMBLY

> **WARNING**
> Depressurize system, remove valve from line, decontaminate.

15.1 Gland Packing Removal

Remove gland packing as mentioned in **Section 14**.

15.2 Bonnet Removal

After untightening bonnet nuts (NPS 2-12 | DN 50 - 300) (20) or bonnet cap screws (NPS 14-24 | DN 350-600)(19), remove bonnet (12). Remove bonnet gasket (11). Remove bonnet studs (NPS 2-12 | DN 50 - 300) (19) if damaged (**Figure 23**).

15.3 End Cover Removal

After untightening end cover nuts (NPS 2-12 | DN 50 - 300)(20a) or end cover cap screws (NPS 14-24 | DN 350-600) (19a), remove end cover (12a), end cover gasket (11a) and lower stem seal springs (10a) (**Figure 24**).

15.4 Stem, Upper Bearing, and Upper Seal Spring Removal

Using a brass bar or drift punch, gently tap the stem (5) from the end cover side to loosen it, and then pull it out through the bonnet side. Support the disc while removing the stem to prevent it from dropping or becoming damaged. On removal of stem, the upper bearing (9) and upper stem seal springs (10) will come out with the stem (**Figure 25**).

> **CAUTION**
> Be careful not to damage the hub spacers (4,4a). Hub spacers (4,4a) are made of tungsten carbide material which is extremely brittle.

15.5 Disc Removal

Remove disc (3) from body (**Figure 26**).

15.6 Upper Stem Component Removal

Push out upper stem seals (7), upper stem seal spacer (8), upper stem seal housing (6) and upper hub spacer (4) from the bonnet side into the body flow bore (**Figure 27**).

15.7 Lower Stem Component Removal

Similarly push out the lower bearing (9a), lower stem seals (7a), lower stem seal spacer (8a), lower stem seal housing (6a) and lower hub spacer (4a) from the end cover side into the body flow bore (**Figure 28**).

15.8 Liner Removal

Push out the liner (2) (**Figure 29**).

15.9 Component Examination

Examine the liner (2), disc (3), upper hub spacer (4), lower hub spacer (4a) and stem (5) for excessive wear. If severe damage is evident, they should be replaced.

Figure 23: Bonnet Removal

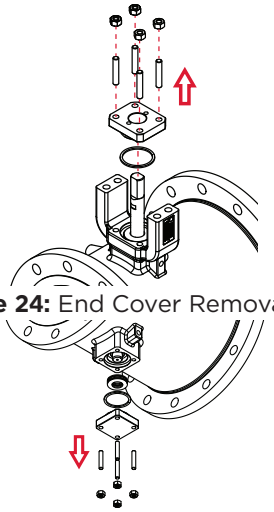

Figure 24: End Cover Removal

Figure 25: Stem Removal

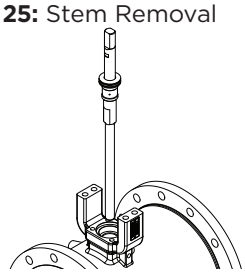

Figure 26: Disc Removal

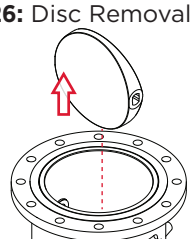

Figure 27: Upper Stem Component Removal

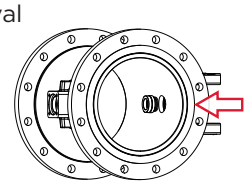

Figure 28: Lower Stem Component Removal

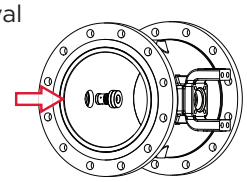

Figure 29: Liner Removal

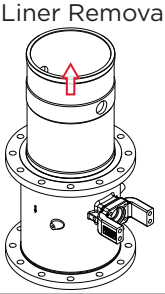

© 2026 BRAY INTERNATIONAL, INC. ALL RIGHTS RESERVED. BRAY.COM The Information contained herein shall not be copied, transferred, conveyed, or displayed in any manner that would violate its proprietary nature without the express written permission of Bray International, Inc.

16.0 VALVE ASSEMBLY

NOTICE

New Gaskets, seals and gland packing should be used every time the valve is assembled after maintenance. Refer **Table 3** – Seal Kit Part Numbers for ordering seal kits.

NOTICE

Use soft dollies for assembling components when necessary. Clean all re-useable components before assembly. All fasteners to be coated with anti-seize compound.

16.1 Orientation and Liner Installation

Place the body (1) on a clean, flat workbench with the inlet flange facing upward. install the liner (2) into the body (1) (**Figure 30**), ensuring proper stem bore alignment.

Note: The larger liner stem hole aligns with the bonnet side of the body while the smaller liner stem hole aligns with the end cover side.

Figure 30: Liner Installation

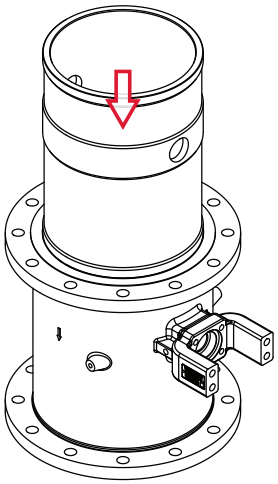

16.2 Lower Stem Component

Insert the lower stem seal housing (6a) and lower hub spacer (4a) through the liner flow bore into the body counter bores. Adjust the liner as required to ensure stem bore alignment (**Figure 31**).

Figure 31: Lower Hub Spacer

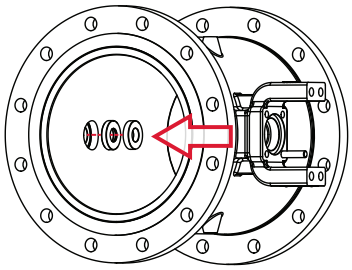

16.3 Upper Stem Component

Install the Upper stem seal housing (6) and upper hub spacer (4) (**Figure 32**) into the liner stem bore.

Figure 32: Upper Hub Spacer

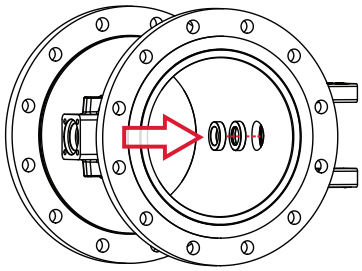

© 2026 BRAY INTERNATIONAL, INC. ALL RIGHTS RESERVED. BRAY.COM The Information contained herein shall not be copied, transferred, conveyed, or displayed in any manner that would violate its proprietary nature without the express written permission of Bray International, Inc.

16.4 Disc Installation

Lower the disc (3) into the liner in the open position (**Figure 33**). Ensure stem bore alignment. Confirm the flat face of the disc is positioned on the upstream side when closed.

Note: Ensure the disc is oriented such that its broached drive aligns with the bonnet side body stem hole.

Figure 33: Disc Installation

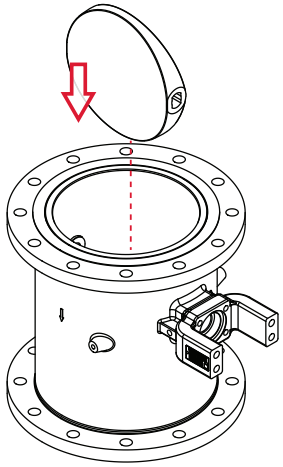

16.5 Stem Installation

Insert the stem (5) into the body stem hole (**Figure 34**) from the bonnet side: Ensure stem flat is parallel to the disc face. Push downward until the stem fully engages with the disc broached drive.

Figure 34: Stem Installation

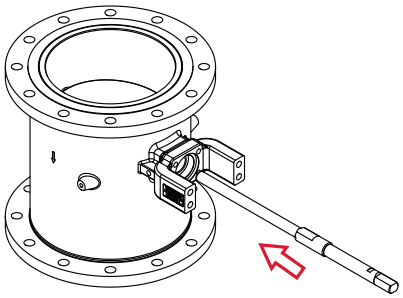

16.6 Upper Stem Seal Installation

Slide upper packing guide T1 over the stem until it rests on the stem step diameter (**Figure 35**). Insert one ring of new upper stem seal (7) over the stem and down into the upper seal housing (6) using upper packing sleeve (T3)(**Figure 37**). Insert upper stem seal Spacer (8) until it rests on the first seal ring. Install the second set of upper stem seals (7) (three rings), one ring at a time, using packing sleeve. Compress each seal ring sequentially to prevent extrusion (**Figure 36**).

Note: Stagger seal ring joints 45° apart.

Figure 35: Upper Packing Guide

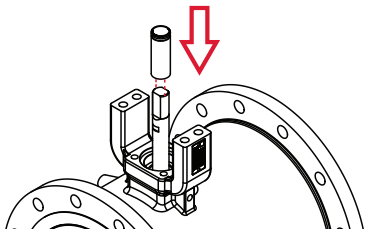

Figure 36: Upper Stem Seals

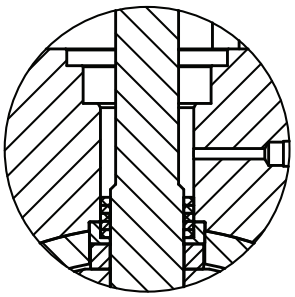

Figure 37: Upper Stem Seal Compression

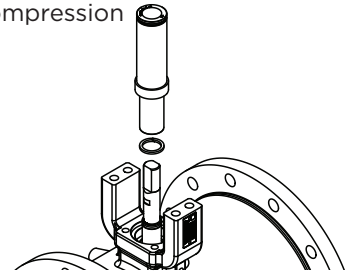

© 2026 BRAY INTERNATIONAL, INC. ALL RIGHTS RESERVED. BRAY.COM The Information contained herein shall not be copied, transferred, conveyed, or displayed in any manner that would violate its proprietary nature without the express written permission of Bray International, Inc.

16.7 Upper Packing Stopper Installation

Before compressing the final ring: Insert upper packing stopper (T2) into the body (**Figure 38**). Compress stem seals until packing sleeve-1 (T3) contacts the packing stopper (T2)(**Figure 39/40**).

Figure 38: Upper Packing Stopper

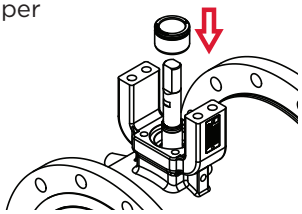

Figure 39: Upper Stem Seal Compression

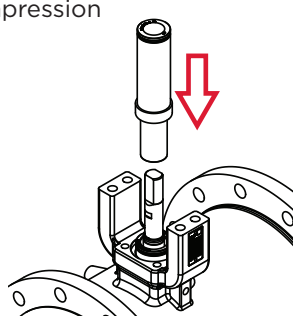

Figure 40: Final Compression

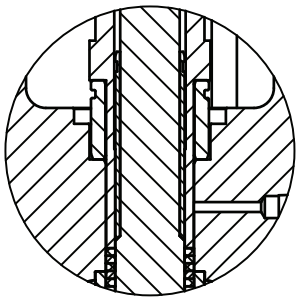

16.8 Incidental Stem Seal Compression

If the stem seals are not sufficiently compressed, remove the packing sleeve-1 (T3). Install upper packing sleeve-2 (T7)(**Figure 41**) and insert the bonnet studs into the valve body. Position the packing compression plate (T6), ensuring that hole “T” in the plate is aligned with the stud, and install the nuts (**Figure 42**). Tighten the nuts evenly in a cross-pattern until upper packing Sleeve-2 (T7) contacts the upper packing stopper (T2) (**Figure 43**).

Figure 41: Packing Sleeve Installation

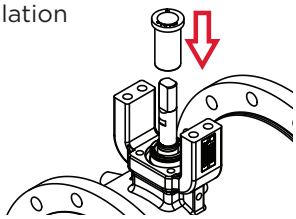

Figure 42: Compression Plate Installation

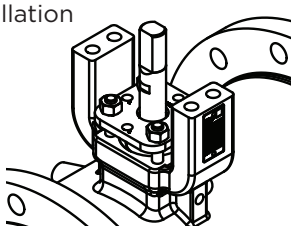

Figure 43: Final Stem Seal Tightening

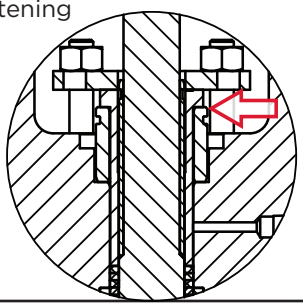

© 2026 BRAY INTERNATIONAL, INC. ALL RIGHTS RESERVED. BRAY.COM The Information contained herein shall not be copied, transferred, conveyed, or displayed in any manner that would violate its proprietary nature without the express written permission of Bray International, Inc.

16.9 Upper Bearing and Seal Spring Installation

Remove packing tools (T1, T2, T3, T6, T7), then install: upper bearing (9) (larger ID facing toward the packing) and upper seal springs (10) (**Figure 44/45**).

Figure 44: Upper Component Installation

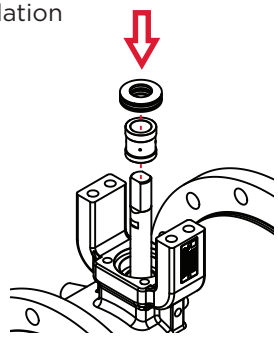

Figure 45: Bearing and Spring Orientation

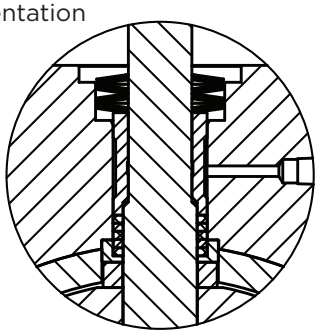

16.10 Bonnet Fixtures Installation

Install a new bonnet gasket (11) into the body recess groove and insert bonnet (12).

Secure bonnet fasteners:

NPS 2-12 | DN 50 - 300: Tighten bonnet nuts (20) (**Figure 46**).
NPS 14-24 | DN 350-600: Tighten bonnet cap screws (19).
Tighten evenly in a cross pattern. Refer to **Table 1** for torque values.

Note: Sizes NPS 2-12 | DN 50 - 300 will have a visible gap between body and bonnet. Sizes NPS 14-24 | DN 350-600 must seat flush.

Figure 46: Bonnet Installation

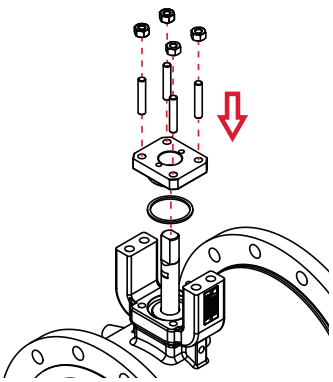

16.11 Thrust Washer, Packing, and Gland Components Installation

Insert the thrust washer (13) into the bonnet (12). Insert the gland packing (14) inside the bonnet (12) (**Figure 47**).

Note: Insert TFE (white) seals first, with the carbon fiber ring at top. Stagger seal ring joints 45° apart when installing. Tamp each ring to the bottom before installing next ring. Install gland studs (21), followed by: gland ring (15), gland retainer (16) and gland nut (22) (finger-tight initially) (**Figure 48**). Tighten gland nuts evenly to specified torque (**Table 1**). For NPS 14-24 | DN 350-600, install gland packing springs (15a) before gland retainer.

Figure 47: Gland Packing Installation

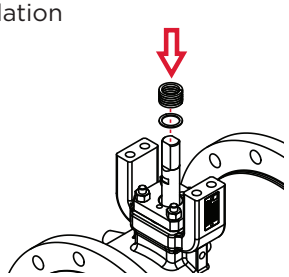

Figure 48: Gland Installation

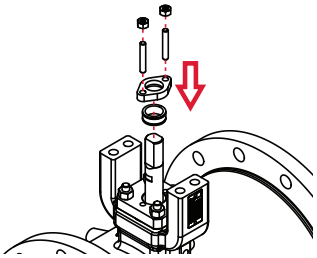

© 2026 BRAY INTERNATIONAL, INC. ALL RIGHTS RESERVED. BRAY.COM The Information contained herein shall not be copied, transferred, conveyed, or displayed in any manner that would violate its proprietary nature without the express written permission of Bray International, Inc.

16.12 Lower Stem Seal Installation

Using lower packing sleeve-1 (T5), install one ring of lower stem seal (7a) through the end-cover side (**Figure 49**). Insert lower seal spacer (8a) until it rests on the seal ring. Install the second set of lower stem seals (7a) (three rings), one ring at a time, using lower packing sleeve (T5) (**Figure 49**). Compress each ring sequentially to prevent extrusion.

Note: Stagger seal ring joints 45 deg apart.

Before compressing the final ring: insert lower packing stopper (T4) (**Figure 50**). Compress stem seals until lower packing sleeve (T5) contacts the stopper (**Figure 51/52**).

Figure 49: Lower Stem Seal Compression

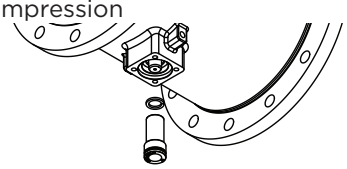

Figure 50: Lower Packing Stopper

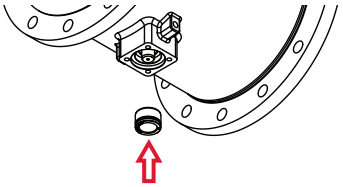

Figure 51: Lower Stem Seal Compression

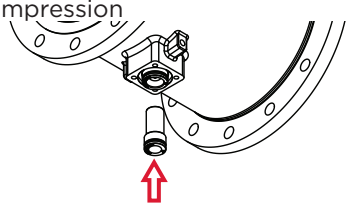

Figure 52: Lower Stem Seals

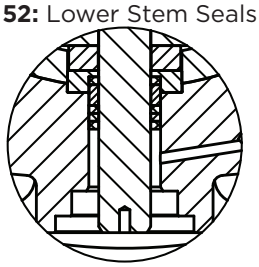

16.13 Incidental Stem Seal Compression

If the stem seals are not sufficiently compressed, remove the packing sleeve (T3). Install lower packing sleeve-2 (T8) (**Figure 53**) and insert the end cover studs into the valve body. Position the packing compression plate (T6), ensuring that hole “L” in the plate is aligned with the stud, and install the nuts (**Figure 54**). Tighten the nuts evenly in a cross-pattern until lower packing sleeve-2 (T8) contacts the packing stopper (T2) (**Figure 55**).

Figure 53: Packing Sleeve Installation

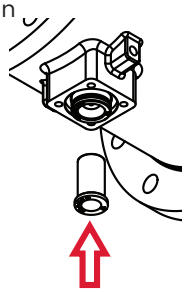

Figure 54: Compression Plate Installation

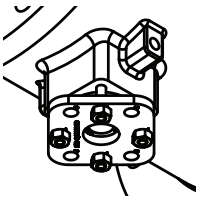

Figure 55: Final Stem Seal Tightening

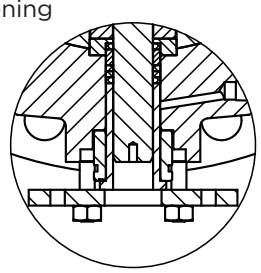

© 2026 BRAY INTERNATIONAL, INC. ALL RIGHTS RESERVED. BRAY.COM The Information contained herein shall not be copied, transferred, conveyed, or displayed in any manner that would violate its proprietary nature without the express written permission of Bray International, Inc.

16.14 Lower Bearing, Seal Spring, and Split Ring Installation

Remove packing tools (T4, T5, T6, T8) then install: lower bearing (9a) (shorter raised rib on OD facing toward the packing) and lower seal springs (10a) (**Figure 56/57**).

Figure 56: Lower Component Installation

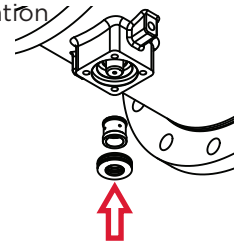

Figure 57: Bearing and Spring Orientation

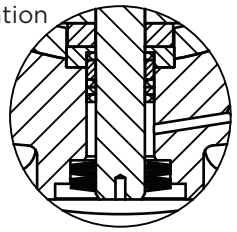

16.15 End Cover and Top Plate Installation

Install a new end cover gasket (11a) into the body recess and install end cover (12a).

Secure end cover fasteners:

NPS 2-12 | DN 50 - 300: Tighten end cover nuts (20a) (**Figure 58**).
NPS 14-24 | DN 350-600: Tighten end cover cap screws (19a).
Tighten evenly in a cross pattern. Refer to **Table 1** for torque values.

Mount top plate (17) to the body using top plate screws (18) (**Figure 59**).

Figure 58: End Cover Installation

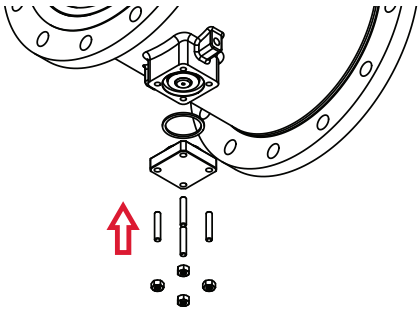

Figure 59: Top Plate Installation

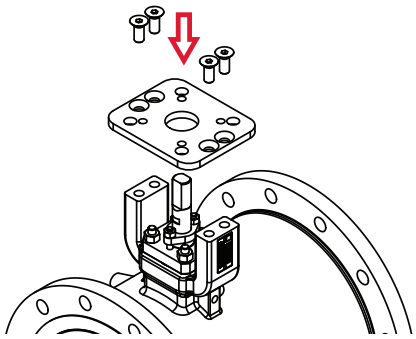

© 2026 BRAY INTERNATIONAL, INC. ALL RIGHTS RESERVED. BRAY.COM The Information contained herein shall not be copied, transferred, conveyed, or displayed in any manner that would violate its proprietary nature without the express written permission of Bray International, Inc.

16.16 NPT Plug Tightening

If previously removed, reinstall and tighten NPT plugs (25) at the top and bottom of the body (**Figure 60/61**).

Figure 60: Upper NPT Plug

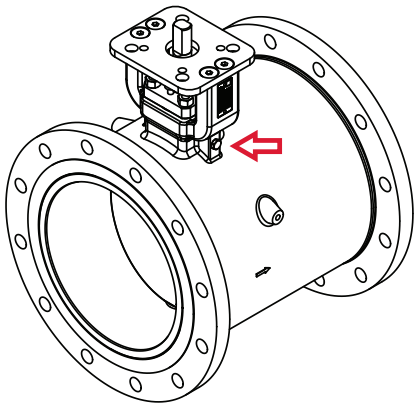

Figure 61: Lower NPT Plug

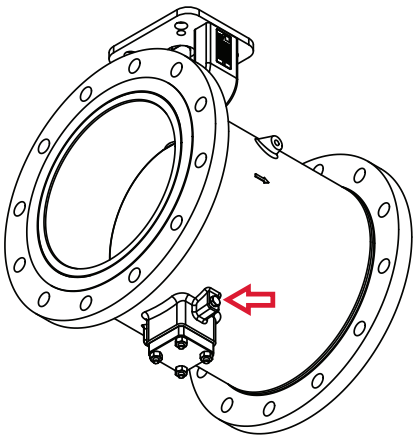

16.17 Final Verifications

Verify all fasteners are torqued correctly. Confirm smooth valve operation. Ensure packing compression is uniform with no extrusion. Clean excess grease, sealant, or debris.

© 2026 BRAY INTERNATIONAL, INC. ALL RIGHTS RESERVED. BRAY.COM The Information contained herein shall not be copied, transferred, conveyed, or displayed in any manner that would violate its proprietary nature without the express written permission of Bray International, Inc.

17.0 PARTS & APPENDICES

Table 1: Torque Chart

SIZE	BONNET NUT TORQUE		END COVER NUT TORQUE		GLAND NUT TORQUE	
	in-lb	N m	in-lb	N m	in-lb	N m
2”	70	8	50	6	60	7
3”	70	8	50	6	60	7
4”	110	12	75	8	80	9
6”	110	12	75	8	80	9
8”	220	25	135	15	110	12
10”	220	25	135	15	110	12
12”	220	25	135	15	110	12
14”	240	28	135	15	210	24
16”	240	28	135	15	210	24
18”	410	47	410	47	280	32
20”	410	47	410	47	280	32
24”	420	48	420	48	280	32

Table 2: Bearing Seal Assembly Toolkits

Assembly Tools Part Numbers	
Size	**Part No.**
2”	**39-0300-79300**
3”	
4”	**39-0600-79300**
6”	
8”	**39-1200-79300**
10”	
12”	
14”	**39-1600-79300**
16”	
18”	**39-2000-79300**
20”	
24”	**39-240-79300**

Table 3: Seal Kit Part Numbers

Seal Kit Part Numbers	
Size	**Part No.**
2”	**390200-21800578**
3”	**390300-21800578**
4”	**390400-21800578**
6”	**390600-21800578**
8”	**391200-21800578**
10”	
12”	
14”	**391600-21800578**
16”	
18”	**392000-21800578**
20”	
24”	**392400-21800578**

© 2026 BRAY INTERNATIONAL, INC. ALL RIGHTS RESERVED. BRAY.COM The Information contained herein shall not be copied, transferred, conveyed, or displayed in any manner that would violate its proprietary nature without the express written permission of Bray International, Inc.

18.0 TROUBLESHOOTING

SYMPTOM	POSSIBLE CAUSE	RECOMMENDED SOLUTION
Leakage from flange	Insufficient pressure on gasket	Follow recommended tightening sequence and tighten flange bolts to recommended torque value.
	Damage to serrated gasket faces prior to or during installation	Remove valve and inspect. Rework gasket faces or replace body if required.
Leakage from gland	Gland packing, upper stem seal, upper stem seal spring or stem damage	Remove valve and inspect. Replace damaged components.
	Valve over-pressurized	Remove valve and inspect. Replace damaged components.
	Packing relaxation	Retighten packing.
Leakage from bonnet	Gasket, upper stem seal, upper stem seal spring or stem damage	Remove valve and inspect. Replace damaged components.
	Valve over-pressurized	Remove valve and inspect. Replace damaged components.
Leakage from end cover	Gasket, lower stem seal, lower stem seal spring or stem damage	Remove valve and inspect. Replace damaged components.
	Valve over-pressurized	Remove valve and inspect. Replace damaged components.
Leakage from NPT plugs	Stem seal, stem seal spring, bearing, hub spacer or stem damage	Remove valve and inspect. Replace damaged components.
	Valve over-pressurized	Remove valve and inspect. Replace damaged components.
High valve torque	Stem seal, stem seal spring, bearing, hub spacer or stem damage	Remove valve and inspect. Replace damaged components.
	Disc blockage	Remove valve and inspect. Remove blockage and clean valve internals. Replace damaged components.
	Media buildup in valve	Cycle valve on a regular basis to clear liner of build up.
	Incorrect actuator sizing	Ensure actuator is correctly sized for the application conditions and valve torque.
Excessive wear on valve internals	Incorrect valve sizing	Ensure valve is correctly sized for the application conditions.
	Incorrect trim selection	Ensure valve trim is selected for the specific application conditions. Consider upgrading trim materials.
	Incorrect valve installation location	Ensure installation follows the guidelines established in section 9.3 & 9.4 as much as practicable.
Excessive wear on adjacent piping	Incorrect valve sizing	Ensure valve is correctly sized for the application conditions.
	Incorrect trim selection	Ensure valve trim is selected for the specific application conditions. Consider upgrading trim materials. Consider Bray wear spool (contact Bray for additional support).
	Incorrect valve installation location	Ensure installation follows the guidelines established in section 9.3 & 9.4 as much as practicable.
	Liner damage	Remove valve and inspect. Replace damaged components.
Excessive valve noise	Cavitation	Ensure valve is correctly sized for the application conditions. Reduce pressure drop if practicable (contact Bray for additional support).

Note: For further troubleshooting and repair options and information, please contact your local Bray representative.

© 2026 BRAY INTERNATIONAL, INC. ALL RIGHTS RESERVED. BRAY.COM The Information contained herein shall not be copied, transferred, conveyed, or displayed in any manner that would violate its proprietary nature without the express written permission of Bray International, Inc.

19.0 RETURN MERCHANDISE AUTHORIZATION

19.1 All products that are returned require a Return Merchandise Authorization (RMA). Contact a Bray representative for instructions and RMA forms to be completed prior to return of any product.

19.2 The following information must be provided when submitting RMA.

- Serial number
- Part number
- Month and year of manufacture
- Actuator specifics
- Application
- Media
- Operating temperature
- Operating pressure
- Total estimated cycles (since last installation or repair)

NOTE: Product information is provided on identification tag attached to device.

NOTICE

Materials must be cleaned and sanitized prior to return. MSDS sheets and Declaration of Decontamination are required.

© 2026 BRAY INTERNATIONAL, INC. ALL RIGHTS RESERVED. BRAY.COM The Information contained herein shall not be copied, transferred, conveyed, or displayed in any manner that would violate its proprietary nature without the express written permission of Bray International, Inc.

SINCE 1986, BRAY HAS PROVIDED FLOW CONTROL SOLUTIONS
FOR A VARIETY OF INDUSTRIES AROUND THE WORLD.

VISIT **BRAY.COM** TO LEARN MORE ABOUT
BRAY PRODUCTS AND LOCATIONS NEAR YOU.

HEADQUARTERS

BRAY INTERNATIONAL, INC.
13333 Westland East Blvd.
Houston, Texas 77041
Tel: +1.281.894.5454

All statements, technical information, and recommendations in this bulletin are for general use only. Consult Bray representatives or factory for the specific requirements and material selection for your intended application. The right to change or modify product design or product without prior notice is reserved. Patents issued and applied for worldwide.
Bray® is a registered trademark of Bray International, Inc.

© 2026 BRAY INTERNATIONAL. ALL RIGHTS RESERVED. BRAY.COM

EN_IOM-S39_20261124

Bray®

THE HIGH PERFORMANCE COMPANY

BRAY.COM